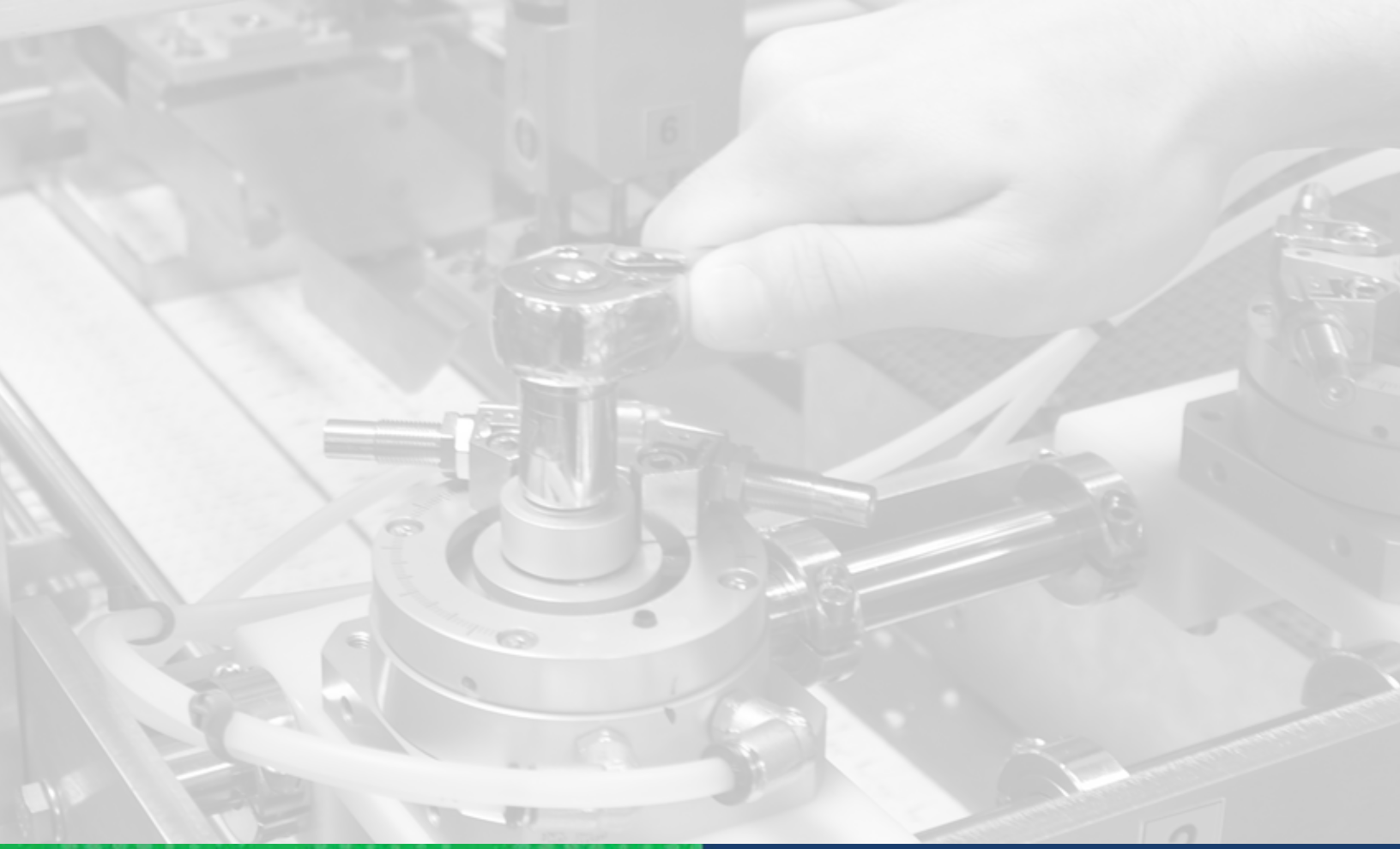

# OPERATION AND MAINTENANCE

# MANUAL

# ARPAC BRAND

MODEL: TS-2300

SN: 210011

JOB: 220562-1-1

The nVenia Family of Brands

ARPAC FISCHBEIN HAMER OHLSON

NVENIA

A DURAVANT COMPANY

750 N Wood Dale Road | Wood Dale, IL 60191 USA | P 847 678 9034 | F 847 671 7006 | www.nvenia.com

# Table of Contents

## Prelude i - Record of Revision

Revision History . . . . . ii-1

Warranty Information . . . . . ii-1

## Prelude ii - Project Layout & Specifications

ii 1.1 Overview . . . . . ii-1

ii 1.2 Layout . . . . . ii-2

ii 1.3 Project Specifications. . . . . ii-3

## Chapter 1 - Introduction

1.1 Introduction . . . . . 1-1

1.2 Using This Manual . . . . . 1-2

1.2.1 Graphical Notations . . . . . 1-2

1.2.2 Photo’s & Illustrations . . . . . 1-3

1.2.3 Manual Design & Layout . . . . . 1-4

1.3 TrayStar™ Series Design Features . . . . . 1-6

1.4 TrayStar™ Series Concept of Operations. . . . . 1-7

## Chapter 2 - Safety

2.1 Safety . . . . . 2-1

2.1.1 Statement of Liability . . . . . 2-1

2.2 Safety Precautions . . . . . 2-2

2.1.1 Interfacing Equipment . . . . . 2-2

2.1.2 Dressing for Safety . . . . . 2-2

2.1.3 Maintaining a Clean Work Area . . . . . 2-2

2.3 Personnel Instructions (PPE) . . . . . 2-3

2.4 Safety Labels . . . . . 2-4

2.5 Energy Isolation Devices . . . . . 2-5

2.5.1 Main Disconnect Switch . . . . . 2-5

2.2.2 Emergency Stop Pushbuttons . . . . . 2-6

2.5.3 Chain Guards & Guard Doors . . . . . 2-8

2.5.4 Motor Disconnects (If Equipped) . . . . . 2-9

2.6 Lockout / Tagout . . . . . 2-10

2.6.1 Electrical LOTO . . . . . 2-11

2.6.2 Pneumatic LOTO . . . . . 2-12

2.6.3 Restoring Power . . . . . 2-12

## Chapter 3 - Mechanical Assemblies

3.1 Overview . . . . . 3-1

3.2 Product Handling . . . . . 3-5

3.2.1 In-feed Conveyor . . . . . 3-5

3.2.2 Product Agitator & Min. Accumulation Sensor . . . . . 3-9

3.2.3 Product Collator . . . . . 3-11

3.2.4 Collator Escapement Flight Bars . . . . . 3-14

3.2.5 Pacing Flight Bars . . . . . 3-17



*© ARPAC, A Duavant Company*

3.3 Tray Handling / Tray Forming . . . . . 3-22

3.3.1 Extended Tray Magazine . . . . . 3-22
3.3.2 Blank Feed Magazine . . . . . 3-26
3.3.3 Lugged Blank Feed Conveyor . . . . . 3-30
3.3.4 Tray Former Assemblies . . . . . 3-32
3.3.5 Hot Melt System . . . . . 3-36
3.3.6 Compression Section . . . . . 3-37

## Chapter 4 - Operator Controls

4.1 Main disconnect (Power On) Switch . . . . . 4-1

4.2 Main Control Panel (Operator’s Station) . . . . . 4-2

4.2.1 HMI . . . . . 4-2
4.2.2 Push Button Controls . . . . . 4-3
4.2.3 Status Beacon Indicator . . . . . 4-4

4.3 Blank Magazine Control Panel . . . . . 4-5

4.4 HMI (Human Machine Interface) . . . . . 4-6

4.4.1 Screen Layouts . . . . . 4-7
4.4.2 Data Entry & Navigation . . . . . 4-9
4.4.3 Security Levels . . . . . 4-11

4.5 HMI Menu Groups . . . . . 4-12

4.5.1 Overview Menu Group . . . . . 4-12
4.5.2 Recipes Menu Group . . . . . 4-14
4.5.3 Set Points Menu Group . . . . . 4-16
4.5.4 Maintenance Menu group . . . . . 4-18
4.5.5 Production Menu Group . . . . . 4-23

4.6 Using the HMI . . . . . 4-25

4.6.1 Logging In . . . . . 4-25
4.6.2 Loading & Copying Recipes . . . . . 4-26
4.6.3 Changing Values . . . . . 4-28

## Chapter 5 - Operating Procedures

5.1 Applying Power . . . . . 5-1

5.2 Loading Consumables . . . . . 5-3

5.2.1 Loading Blanks . . . . . 5-3

5.3 Startup & Shutdown Procedures . . . . . 5-4

5.3.1 Pre-Start Inspection . . . . . 5-4
5.3.2 Power On . . . . . 5-4

5.4 Putting the TrayStar™ Into Cycle . . . . . 5-5

5.5 Stopping the TrayStar™ . . . . . 5-6

5.5.1 Performing an Emergency Stop . . . . . 5-6
5.5.2 Stopping Under Normal Conditions . . . . . 5-6
5.5.3 Short Term Shutdown . . . . . 5-6
5.5.4 Long Term Shutdown . . . . . 5-6

5.6 Clearing Jams . . . . . 5-7

5.6.1 Identifying the Jam . . . . . 5-7
5.6.2 Clearing . . . . . 5-7

5.7 Resetting Torque Limiters . . . . . 5-9

 *© ARPAC, A Duavant Company*

## Chapter 6 - Troubleshooting

6.1 Overview . . . . . 6-1

6.2 Fault Messages . . . . . 6-2

6.3 Abnormal Running Conditions . . . . . 6-8

## Chapter 7 - Maintenance

7.1 PM Schedule . . . . . 7-1

7.2 Daily Tasks . . . . . 7-3

7.2.1 Work Around Safety Inspection . . . . . 7-3

7.2.2 Cleaning External Surfaces . . . . . 7-4

7.2.3 Check Emergency Stop Buttons . . . . . 7-4

7.2.4 Inspect Vacuum Cup Filters . . . . . 7-5

7.3 Weekly Tasks . . . . . 7-6

7.3.1 Cleaning Photo-Eyes . . . . . 7-6

7.3.1 Inspect Glue Guns & Hoses . . . . . 7-6

7.4 Quarterly Tasks . . . . . 7-7

7.4.1 Inspect & Clean Conveyor Belts . . . . . 7-7

7.4.2 Clean & Lubricate Drive Chains . . . . . 7-8

7.4.3 Inspect Compression Section Chain Tension . . . . . 7-9

7.5 Bi-Annual . . . . . 7-10

7.5.1 Check Fastners for Tightness . . . . . 7-10

7.5.2 Inspect Gerarbox Seals . . . . . 7-10

7.6 Chain & Bearing Maintenance . . . . . 7-11

7.6.1 Chain Lubrication & Care . . . . . 7-11

7.5.2 Bearing Lubrication & Care . . . . . 7-11

## Chapter 8 - Service / Support Information

8.1 Service Information Introduction . . . . . 8-1

8.2 Objective . . . . . 8-1

8.3 Service Personnel . . . . . 8-1

8.4 Training . . . . . 8-1

8.5 ARPAC & SUPPORTPRO Commitment . . . . . 8-2

8.6 Technician Scheduling . . . . . 8-2

8.7 Installation Policy . . . . . 8-2

8.8 The SUPPORTPRO Advantage . . . . . 8-2

## Appendix A - Illustrated Assembly Drawings and Mechanical BOM

## Appendix B - Electrical Schematics

## Appendix C - OEM Vendor Information CD



*© ARPAC, A Duavant Company*

# Record of Revision

## i.1. Record of Revisions

### i.1.1. Revision History

| REV | Date | Reason for Change |
|---|---|---|
| A | Oct 2009 | Original |
| B | Mar 2010 | Series Update |
| C | Sep 2011 | Series Update |
| D | Jul 2017 | Series Update |

Table i-1. Revision History

### i.1.2. List of Affected Pages

| Page Number | Rev Level | Page Number | Rev Level | Page Number | Rev Level |
|---|---|---|---|---|---|
| All | A | | | | |
| All | B | | | | |
| All | C | | | | |
| All | D | | | | |

Table i-2. List of Affected Pages

© ARPAC, A Duravant Company

# ii

# Layout & Project Specifications

## *ii.1.* Overview

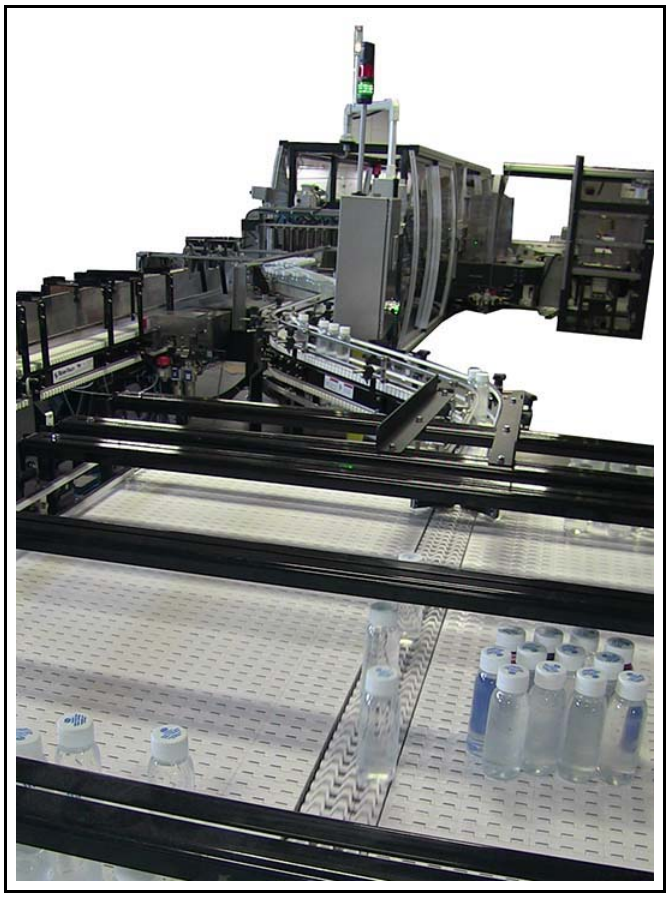

## *ii.2.* Layout


© ARPAC, A Duravant Company

| REVISIONS | | | |
|---|---|---|---|
| RV | DATE | BY | DESCRIPTION |
| A | 5/10/2021 | SRA | ADDED BRIDGE CONVEYOR TO SIDE TRANSFER |

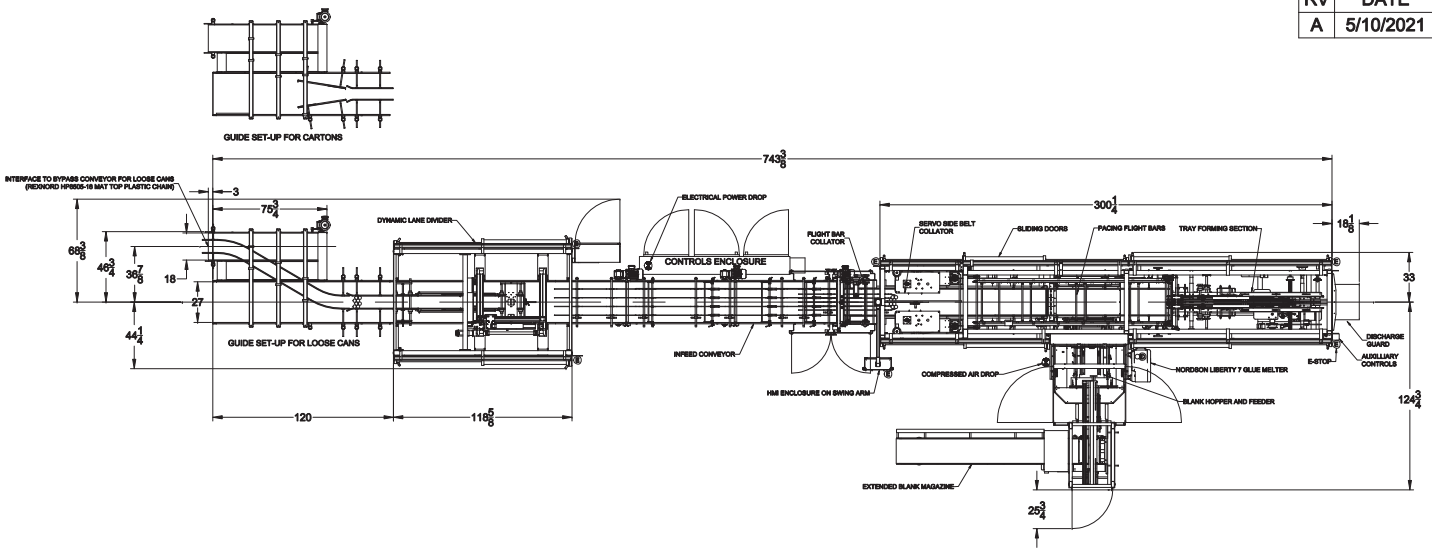


| PRODUCT INFORMATION | | PRODUCT IN | | | | PRODUCT OUT | | | |
|---|---|---|---|---|---|---|---|---|---|
| PROD # | PRODUCT DESCRIPTION | WIDTH | LENGTH | HT | RATE | PATTERN | WIDTH | LENGTH | RATE |
| 1 | 355 ML 12 COUNT LOOSE | 2.26 | 2.26 | 6.13 | 744 | 4 X 3 X 1 | 9.04 | 6.78 | 62 |
| 2 | 355 ML 4-PACK CARTON, 6 PER TRAY | 4.52 | 4.52 | 6.13 | 200 | 3 X 2 X 1 | 13.56 | 9.04 | 34 |
| 3 | 355 ML 6-PACK CARTON, 4 PER TRAY | 6.78 | 4.52 | 6.13 | 134 | 2 X 2 X 1 | 13.56 | 9.04 | 34 |
| 4 | 355 ML 12-PACK CARTON, 2 PER TRAY | 9.04 | 6.78 | 6.13 | 67 | 2 X 1 X 1 | 13.56 | 9.04 | 34 |
| 5 | 355 ML 24-PACK CARTON, 1 PER TRAY | 13.56 | 9.04 | 6.13 | 62 | 1 X 1 X 1 | 13.56 | 9.04 | 62 |
| 6 | 12 OZ 12 COUNT LOOSE | 2.60 | 2.60 | 4.81 | 744 | 4 X 3 X 1 | 10.40 | 7.80 | 62 |
| 7 | 12 OZ 24 COUNT LOOSE | 2.60 | 2.60 | 4.81 | 800 | 4 X 6 X 1 | 10.40 | 15.60 | 34 |
| 8 | 12 OZ 4-PACK CARTON, 6 PER TRAY | 5.20 | 5.20 | 4.81 | 200 | 3 X 2 X 1 | 15.60 | 10.40 | 34 |
| 9 | 12 OZ 6-PACK CARTON, 4 PER TRAY | 7.80 | 5.20 | 4.81 | 134 | 2 X 2 X 1 | 15.60 | 10.40 | 34 |
| 10 | 12 OZ 12-PACK CARTON, 2 PER TRAY | 7.80 | 10.40 | 4.81 | 67 | 2 X 1 X 1 | 15.60 | 10.40 | 34 |
| 11 | 12 OZ 24-PACK CARTON, 1 PER TRAY | 15.60 | 10.40 | 4.81 | 62 | 1 X 1 X 1 | 15.60 | 10.40 | 62 |
| 12 | 16 OZ 12 COUNT LOOSE | 2.60 | 2.60 | 6.13 | 744 | 4 X 3 X 1 | 10.40 | 7.80 | 62 |
| 13 | 16 OZ 24 COUNT LOOSE | 2.60 | 2.60 | 6.13 | 800 | 4 X 6 X 1 | 10.40 | 15.60 | 34 |
| 14 | 16 OZ 4-PACK CARTON, 6 PER TRAY | 5.20 | 5.20 | 6.13 | 200 | 3 X 2 X 1 | 15.60 | 10.40 | 34 |
| 15 | 16 OZ 6-PACK CARTON, 4 PER TRAY | 7.80 | 5.20 | 6.13 | 134 | 2 X 2 X 1 | 15.60 | 10.40 | 34 |
| 16 | 16 OZ 12-PACK CARTON, 2 PER TRAY | 7.80 | 10.40 | 6.13 | 67 | 2 X 1 X 1 | 15.60 | 10.40 | 34 |
| 17 | 16 OZ 24-PACK CARTON, 1 PER TRAY | 15.60 | 10.40 | 6.13 | 62 | 1 X 1 X 1 | 15.60 | 10.40 | 62 |

ANY PRODUCTS SPECIFIED ABOVE THAT ARE NOT PROVIDED FOR MACHINE SETUP/TESTING AT ARPAC, INCLUDING CONSUMABLES (CORRUGATE, FILM, GLUE), WILL REQUIRE ADDITIONAL SETUP/TESTING IN THE FIELD AT THE STANDARD SERVICE AND ENGINEERING RATE.

## TECHNICAL INFORMATION

PRODUCT ELEVATION: 48" +2/-0
ELECTRICAL POWER: 460V 60HZ 3PH, 70 FULL LOAD AMPS
MAIN CIRCUIT BREAKER AMPERAGE: 90A, 5KA SCCR
COMPRESSED AIR: 80 PSI (OPERATING PRESSURE) 20 SCFM
AMBIENT TEMPERATURE LESS THAN 95 DEG F
ARPAC PAINT COLORS: BLACK & SILVER
IP ADDRESS SCHEME: 10.255.255.XXX
PLC FIRMWARE VERSION: STUDIO 5000 V32
HMI FIRMWARE VERSION: FACTORY TALK STUDIO V10

Approved By:_____
Signature:_____
Date:_____
RETURN TO:
ARPAC

ARPAC
A DURAVANT COMPANY
9555 WEST IRVING PARK RD.
SCHILLER PARK, IL 60176

| | | | |
|---|---|---|---|
| DRAWN: 4/22/2021 | BY: SRA | SCALE: N/A | SIZE: B |
| RELEASED: | FILENAME S220562-1-1 | APPROVED BY: | |
| DESCRIPTION: LAYOUT, TRAY LOADER, TS-2300 | | | |
| BLUE MARBLE PRODUCTIONS | | DRAWING NUMBER: S220562-1-1 | |

# 1

# Introduction

## 1.1. Introduction

Thank you for choosing ARPAC for your packaging equipment. We sincerely appreciate your business.

For over 47 years, ARPAC has been a leader in secondary packaging machinery with proven experience in designing and manufacturing complex integrated packaging lines. As an experienced Original Equipment Manufacturer (OEM) integrator, ARPAC has in-house capabilities to conceptualize, manufacture, install and service complete end-of-line packaging solutions.

ARPAC is renowned for providing high quality end-of-line packaging machinery to consumer goods and industrial product producers. We delivery solutions to producers of food, beverage, building supplies, automotive products, printed publications, personal care products and a wide variety of packaged goods.

### *Corporate Office*

Conveniently located just minutes from Chicago's O'Hare International Airport.

ARPAC

9555 Irving Park Road

Schiller Park, IL 60176

www.arpac.com

847-678-9034

A Duravant Company

## *1.2.* Using this Manual

This manual is an operations and maintenance manual for ARPAC packaging equipment. Use this manual if you are responsible for using, operating and maintaining the equipment. It is organized in a manner that can be easily understood by personnel with reasonable experience. This manual is intended to provide clear and simple explanations on how to safely operate and maintain the equipment.

If operated and maintained correctly, this machine is designed to provide the user years of service. It combines up-to-date, state-of-the art technology as well as ARPAC's enormous experience in the area of packaging systems.

### *1.2.1. Graphical Notations*

To help communicate hazardous and nonhazardous alerts, the following graphics are used through out this manual.

Hazard Alerts

| |
|---|
| DANGER |
| **DANGER indicates a hazardous situation which, if not avoided, will result in serious injury or death** |

| |
|---|
| WARNING |
| **WARNING indicates a hazardous situation which, if not avoided, could result in serious injury or death** |

| |
|---|
| CAUTION |
| **CAUTION indicates a hazardous situation which, if not avoided, could result in minor or moderate injury** |

| |
|---|
| NOTICE |
| **NOTICE indicates information considered important, but not directly injury related (i.e. could cause equipment or property damage)** |


*© ARPAC, a Duravant Company*

### Non-Hazard Alerts

Indicates information considered important

Indicates detailed on complex or difficult procedures.

**Required Tools**

Indicates the need for special tools that may be required to perform a procedure or task.

### *1.2.2. Photo's & illustrations*

Photographs and illustration appear through out the manual for informational purposes. For highly complex and Engineered to Order (ETO) projects, actual machine photos, when possible, are used. However, not every photo shown in this manual will be of your specific machine(s).

| NOTICE |
|---|
| **Dimensions and specifications are approximates and drawings may not always be to scale.** |

| WARNING |
|---|
| **Some photo's may show safety guarding and fencing removed for illustration purposes only.**<br>**Never operate equipment with safety devices damaged, removed or modified.** |

### *1.2.3. Manual Design & Layout*

This manual is organized into the following sections:

| # | Description | Comments |
|---|---|---|
| TOC | Table of Contents | The table of contents is the directory of this manual. |
| i | Prelude i | Record of Revisions |
| ii | Machine Layout Drawing & Spec Sheet | The layout and spec sheet provide machine specific information. Use this information to identify your machine's specific serial and model numbers. |
| iii | Warranty Statement | This section includes the equipment Warranty Statement. |
| 1 | Introduction | This section introduces the end user to Arpac, the equipment purchased. Explaining how to use the manual is also covered. |
| 2 | Safety | Describes the safety precautions that should be followed when working with, on or around the equipment. |
| 3 | Mechanical Sub-Assemblies | Identifies and describes the individual mechanical assemblies, their functions and how they interact. |
| 4 | Operator Controls | Explains the purpose and location of all the controls used to operate the machine, including detailed instructions on how to use the HMI. |
| 5 | Operating Procedures | This section is dedicated to the operator. It describes in detail step-by-step procedures for starting, stopping and operating the equipment including such operator functions as changeovers, if applicable. |
| 6 | Troubleshooting & Corrective Maintenance | This section was designed to help the operator and the maintenance personnel understand and resolve possible problems with the machine. Abnormal running conditions and error messages are covered in this section. |
| 7 | Preventive Maintenance | Explains the tasks maintenance personnel should do in order keep the machine in top running condition. |
| 8 | Glossary of Terms | This section contains words that pertain to the equipment, which the operator may not be familiar with. |
| 9 | Parts & Service Support Information | This section contains an overview of ARPAC's service. Included are a field service policy, installation policy and parts ordering information with an order form. |
| A1 | Mechanical Assembly Drawings / Spare Parts Lists | The mechanical assembly drawings are the prints for all of the major assemblies on your machine with the complete mechanical bill of material. |


*© ARPAC, a Duravant Company*

| # | Description | Comments |
|---|---|---|
| A2 | Electrical Information | Included are electrical schematics and complete electrical bill of material. |
| A3 | Installation Considerations | Installation of complex systems should only be performed by qualified personnel with heavy equipment rigging experience. This section provides considerations that should be taken into account for planning purposes. Step by step instruction are not included. For more information, contact our Technical Service Department. |
| A4 | Vendor Information | Here you will find manufacturer's manuals for certain components. |

## *1.3.* Design Features of the TrayStar™ 2000 Series

ARPAC'S TrayStar™ 2000 Series continuous motion tray loaders make tray loading a variety of products fast and easy. The TrayStar™ line integrates tray erecting, product loading, and sealing, into one inline continuous motion packing machine. Wrap-around trays ensure that the product is tightly fit preventing scuffing and product damage.

ARPAC'S TrayStar™ 2000 Series collates a variety of product shapes and sizes, such as: bottles, cans, bundles and cartons or jars, and loads them onto a wrap-around tray at speeds ranging from 35 to 60 trays a minute. The machine features gentle product handling and loading and can be easily integrated with other equipment, including tray wrappers, turners and stackers.

- Continuous motion wrap-around tray former/loader
- Simple machine adjustments and quick change capabilities for fast product changeovers
- Speeds up to 60 trays per minute
- Heavy-duty rugged construction designed for durability and around-the-clock operation
- Laser cut and CNC machined components for maximum precision
- Baked on powder coat finish provides a durable scratch resistant surface and prevents corrosion
- Nordson ProBlue® hot melt glue unit for superior application flexibility and adhesion
- Rolling canopy guarding provides safe, easy access to the machines interior
- Allen-Bradley® programmable logic controller with ARPAC standard operator interface
- User-friendly ARPAC operator interface with message display and self diagnostics
- NEMA 12 electrical cabinet and controls
- Low blank alert
- Gentle product handling
- Central point lubrication simplifies periodic maintenance
- User-Friendly Operator Interfaces Rapid Changeover with Color Coded Spacers
- Product Grouper
- Folding Section
- Flight Bar Section


*© ARPAC, a Duravant Company*

## *1.4.* TrayStar™ 2000 Series Concept of Operation

The system operation begins when the product is transferred onto the In-feed conveyor and separated into lanes. The product is fed into the collator and arranged into the desired configuration. Product is then conveyed into the flight bar assembly and the configuration is pulled together with the aid of product guides.

Simultaneously, a tray blank is pulled by a vacuum pick off unit from a side mounted vertical hopper and transferred through pinch rollers to a blank lug conveyor located beneath the product flight bar assembly. The tray blank is advanced by a lug conveyor in sync with the product being pushed by flight bars. The product configuration is pushed by the flight bar onto the tray blank as both are entered into the tray pocket conveyor.

The blanks are then folded by the cam closing pocket conveyor around the product. The trailing edge minor flap is tucked into place by rotary fingers. The side flaps of the carton are lifted and held by guides while hot melt glue is applied by controlled applicators. Pressure is applied to the glue flaps by a horizontal compression section, and a tight, squarely formed tray exits the compression section.

TrayStar™ 2000 Series consists of mechanical assemblies, motion control devices such as air cylinders, servo motors, AC motors and VFD's (Variable Frequency Drives), a number of photo-cell and proximity sensors to detect and control the product throughout the process and a single PLC (Programmable Logic Controller) that integrates all of these components together. The Operator Control Station provides one centralized point to monitor and effect the performance of the machine.

*© ARPAC, a Duravant Company*

# 2

# Safety

## 2.1. Safety

Every effort has been made by ARPAC to provide you with a safe machine. This section describes the safety precautions that should be taken when working with, on or around the equipment. It is essential that machine operators and maintenance personnel follow the safety information. Safety everyone's responsibility and the information in this chapter is vital to maintaining a quality work environment.

### 2.1.1. Statement of Liability

While this machine has been designed for safer operation, improper operation or carelessness may result in serious injury or death, harm to the environment and damage to equipment. The manufacturer or its agents and representatives assume no responsibility for the following.

1. Injury or danger from improper use of the machine.
2. Problems or hazards resulting from failure to maintain the equipment as specified in this manual.
3. Equipment which has been tampered with or modified. ARPAC is not liable for any damage or injury arising from failure to follow the instructions and procedures provided within the manuals or associated material, or from user failure to use caution when installing, operation, adjusting, or servicing this machine. ARPAC is not liable for damage or injury arising from the use of this product for any other use than that intended by the manufacturer.

## 2.2. Safety Precautions

### 2.2.1. Interfacing Equipment

Observe all applicable codes when interfacing this equipment to other equipment. Specific attention must be paid to any pinch points that may be created and the prevention of unintended restart of the equipment when the electrical interlocks shut it down.

### 2.2.2. Dressing for Safety

- Tie or pull back long, loose hair that can get caught in the machinery.
- Remove loose, dangling jewelry and rings and watches that can get caught in the machinery.
- Ensure that radio headphone wires do not get caught in the machinery and cause personal injury.
- Dress comfortably. Tight clothing restricts the ability to move freely and safely.
- Do not wear shoes with slippery soles, such as high heels or boots. Uncomfortable shoes can cause personal fatigue and reduce the ability to work well.
- Do not wear neckties or scarves.
- Roll loose sleeves or secure them with rubber bands.
- Button or remove open sweaters or jackets.
- Tuck in shirttails.

### 2.2.3. Maintaining a Clean Work Area

Keep the work area clean to avoid injuries and damage to the equipment. Inspect your work area for possible causes of accidents:

- Water and other spills are dangerous. Clean and dry the area immediately after a spill.
- Keep a 3-foot clear walkway around the entire machine. Boxes and papers are hazards when left on the floor near the machine.
- Keep all food and drink away from the machine.
- Keep your work area well lit. Report all burned-out bulbs to your supervisor.
- Do not leave tools and other loose items on the machine.
- A cluttered work area requires unnecessary and hasty movement that causes accidents. Keep all materials orderly and easily accessible.


© ARPAC, A Duravant Company

## 2.3. Personnel Instructions

Read and understand the following personnel safety information before operating the equipment.

### PPE

Make sure that you wear safety goggles and other personal protective equipment according to your company's safety standards when operating this machine. You may get injured if you do not.

### Disconnect Power Before Servicing

Make sure that all the power is disconnected from machine before servicing it. You may get severely injured if you do not.

### Proper Cleaning Solvents

Only use non-flammable, non-aerosol cleaning solvents to clean the equipment.

### Keep Hands and Other Body Parts Clear

All personnel working around or coming in contact with the equipment must be instructed to keep their hands and other body parts of their person and clothing clear of all moving parts.

### Ensure Safety Devices are Operational

Equipment must not be operated if safety devices, including guards and doors, removed, disconnected or damaged.

### Never Reach Into Equipment

Personnel shall not reach into the equipment for any reason, including maintenance, adjustment or clearing of jams, while the equipment is in the cycle mode. The cycle mode stops when the guard doors are opened or when the CYCLE STOP button is pressed. The process may take a couple of seconds. Do not reach into the machine until the machine has stopped.

Before any person reaches into the equipment for maintenance or adjustment, air and electrical power shall be turned off using lockable shutoffs provided. The clearing of jams may be done while the machine is turned on, but not while in the cycle mode.

Anyone entering the machine for maintenance, troubleshooting or any procedure entailing the removal of guards or performing work at any point of operation, shall be required to observe all applicable lockout-tagout requirements.

## 2.4. Safety Labels

Safety labels are placed at various locations around the machine to communicate potential hazards.

*Figure 2-1 - Red & Black labels indicate DANGER hazards*

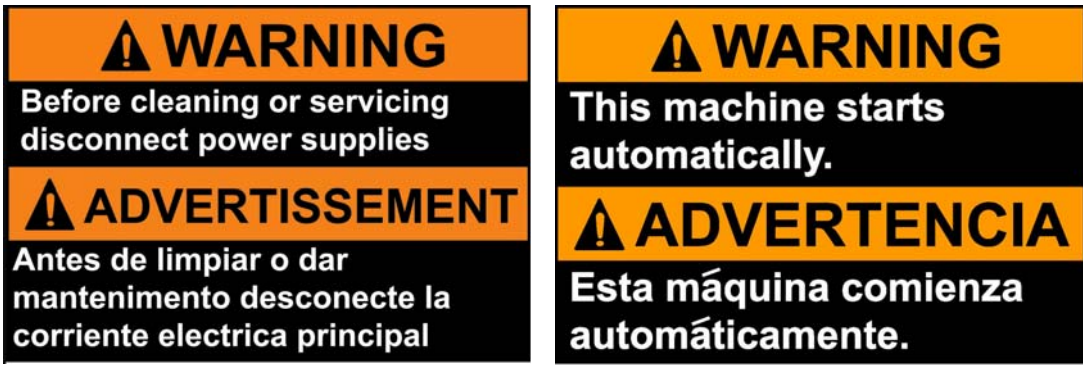


*Figure 2-2 - Orange & Black labels indicate WARNING hazards*

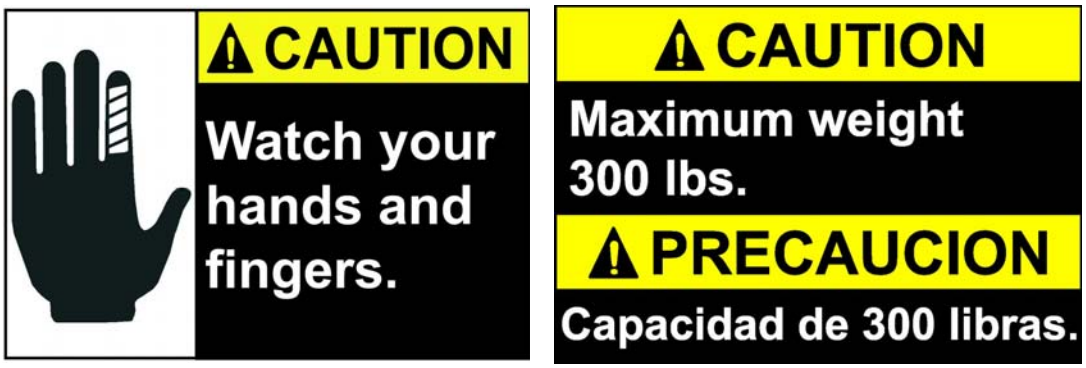


*Figure 2-3 - Yellow & Black labels indicate a Caution hazardous situation*


© ARPAC, A Duravant Company

## 2.5. Energy Isolating Devices

The section discusses the various devices and proper methods for isolating energy to prevent injuries when its necessary to stop the machine to clear jams or perform maintenance, for example.

### 2.5.1. Main Disconnect Switch

The Main Disconnect is located on the main electrical cabinet. It is connected via a rod though the door to the Main Circuit Breaker that supplies all power to the equipment. Different types of switches are used, depending on the type and style of the enclosure.

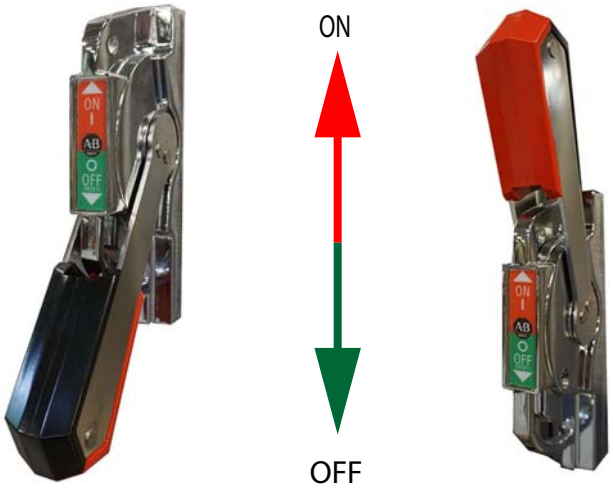


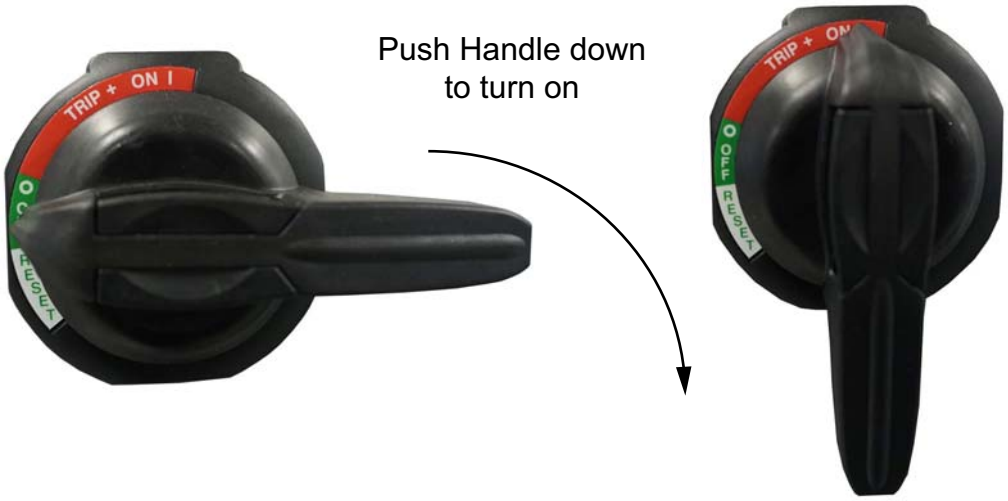

### *2.5.2. Emergency Stop Buttons*

There are several Emergency Stop buttons located on the machine. Pressing any of these buttons will immediately stop the machine and drop all electrical and pneumatic power to the machine except the machine's internal controls. Below is a map showing the typical locations of the E-Stops for this Series of equipment.

NOTICE

**Additional E-Stops are often added the equipment per customer's specifications. Refer to the project specific layout for exact locations for your machine.**

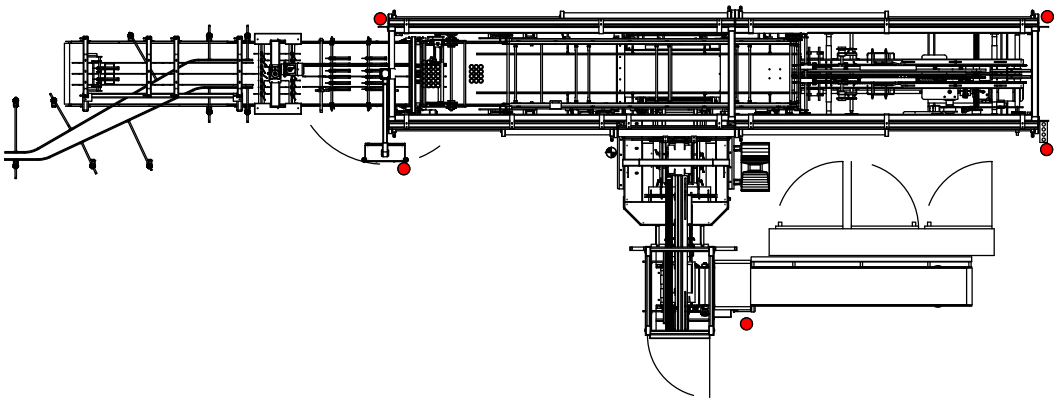

WARNING

**If the Wrapper is integrated with a tunnel, activating an E-Stop will stop the tunnel conveyor belt. If machine stops with product in it, remove it as soon as it is safe to do so. Product could potentially catch fire or explode if you do not. Do not try to push product out with your hands.**


*© ARPAC, A Duravant Company*

There are several different types of E-stop buttons. Some are lit, some are not. Some are reset by twisting the button, while others are reset by pulling them straight out. Whatever type of E-stop happens to be on your system, the function is identical. They all stop the machine immediately in case of an emergency.

**E-Stop in normal run state.**

**E-Stop activated.**
**(LED illuminated)**

### 2.5.3. Chain Guards and Guard Doors

| |
|---|
| WARNING |
| **Equipment must never be operated if any safety devices, including guards and doors, are removed, disconnected or damaged.** |

Chain guards are bolted to the machine, requiring a tool to remove.

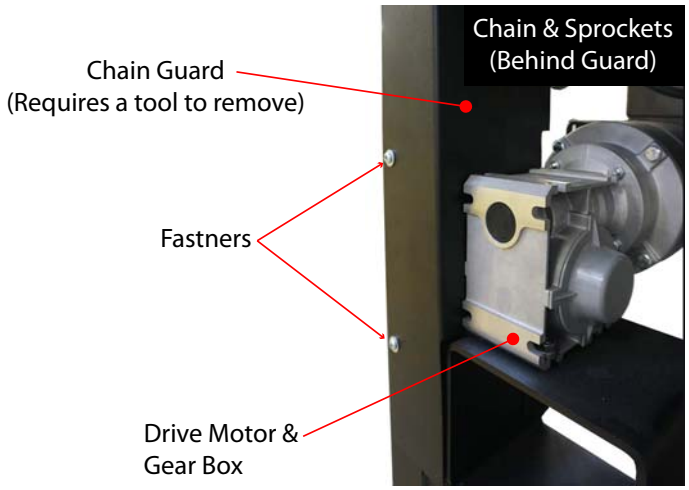


Guard doors are equipped with an interlocking switch. When a door is opened, the switch is interrupted, disabling power to motion control devises, regardless of where the machine is in it's cycle. Personnel shall not reach into the equipment for any reason, including maintenance, adjustments or clearing of jams, while the equipment is in the cycle mode. The process of stopping the cycle may take a couple of seconds. Do not reach into the machine until the machine has stopped. Refer to the electrical schematic for specific Safety Circuit information.

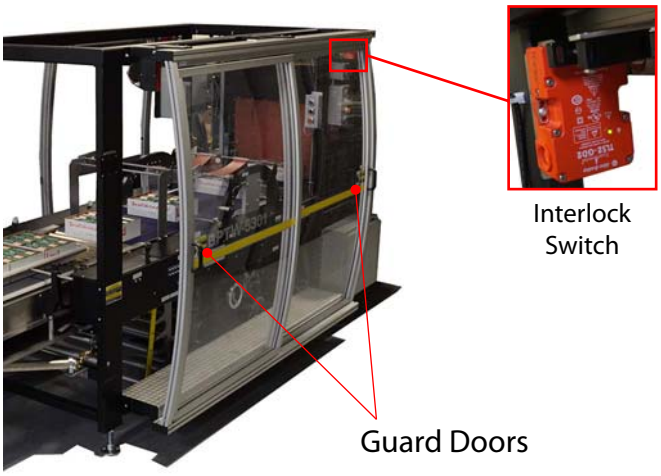



© ARPAC, A Duravant Company

### 2.5.4. Motor Disconnects (If equipped)

If equipped, individual motors can be wired to an isolation disconnect that when in the "Off" position disables power to that motor only. These devises are not connected directly to the machine's safety circuitry, but they can be wired to an input on the PLC so that a message can be displayed on the HMI to indicate that the motor is "Off".

*Figure 2-4 - Motor Disconnect Switch*

If a motor is connected to one of these disconnects, the disconnect will be within line of sight of the motor and identified as associated with that motor. If your machine has these disconnects installed, refer to the machine's electrical schematic for more information.

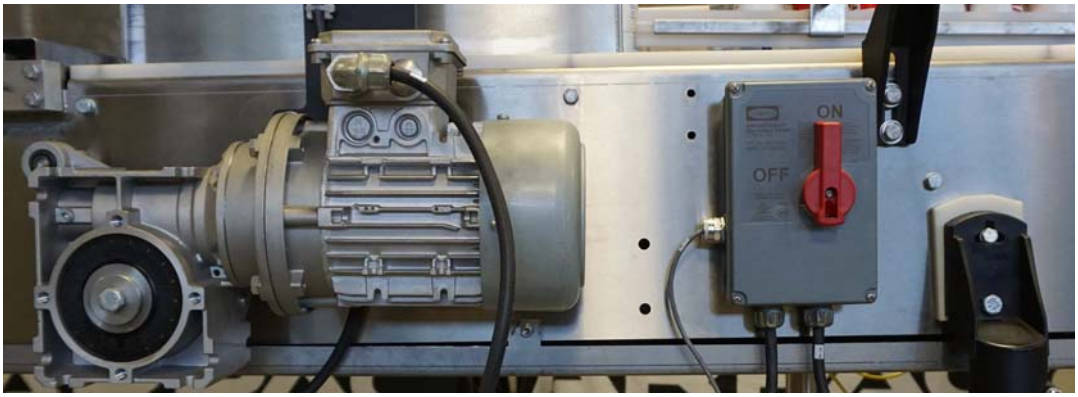

## 2.6. Lock Out / Tag Out

You can lock the machine out by applying locks to the electrical main disconnect and the pneumatic regulator. Locking these two sections out will ensure safety when working on the equipment.

When you are going to work on ARPAC equipment, follow the Lock Out / Tag Out (LOTO) procedure to ensure safety.

NOTE

Because companies tend to tailor the LOTO protocols specific to them, we advise all users to refer to their company's procedure manual. The LOTO procedure described here are the minimum requirements

### *Lockout/Tagout Kit*

A typical lockout/tagout kit is shown in the figure below. ARPAC machines can be locked out with most standard lockout/tagout kits.

*Figure 2-5 - Typical LOTO Kit*


© ARPAC, A Duravant Company

### 2.6.1. Electrical LOTO

It is important to safely shut down the equipment and lock it out electrically before performing any maintenance.

1. Notify affected employees that the equipment is going to be locked out.
2. Safely shut down the equipment.
3. Complete the information on the tag.
4. Apply the lock to the main disconnect. (The example illustrates one type of main disconnect switch. Other styles have the same capacity for lock application.)

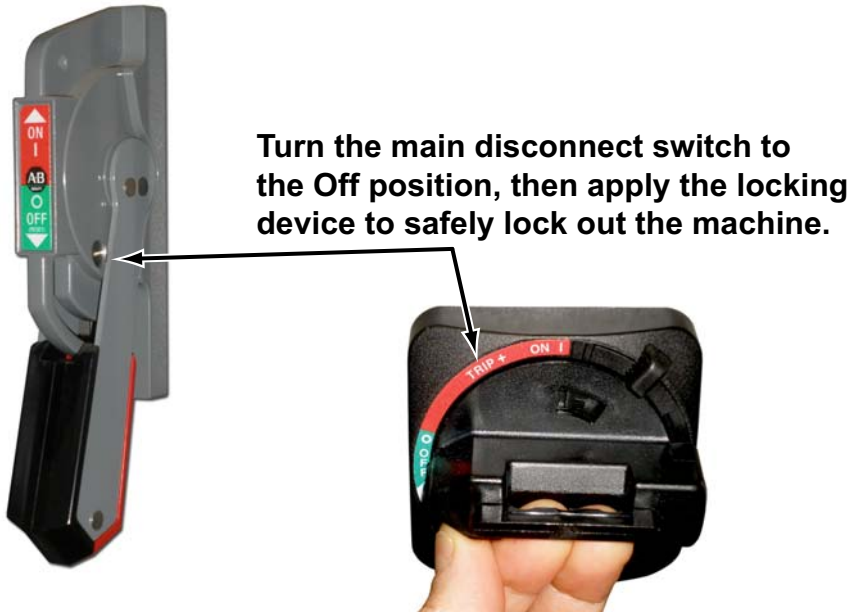


*Figure 2-6 - Lockout/Tagout at Main Disconnect*

| WARNING |
|---|
| **Never assume power has been isolated. Always verify.** |

Verify power is off. The machine is now electrically locked out.

### 2.6.2. Pneumatic Lockout/Tagout

To lock out the air supply:

1. Notify all affected persons that he equipment is being locked out.
2. Complete the information on the tag.
3. Turn the red knob clock-wise to shut off the valve and align the knockouts for the lock and apply lock.

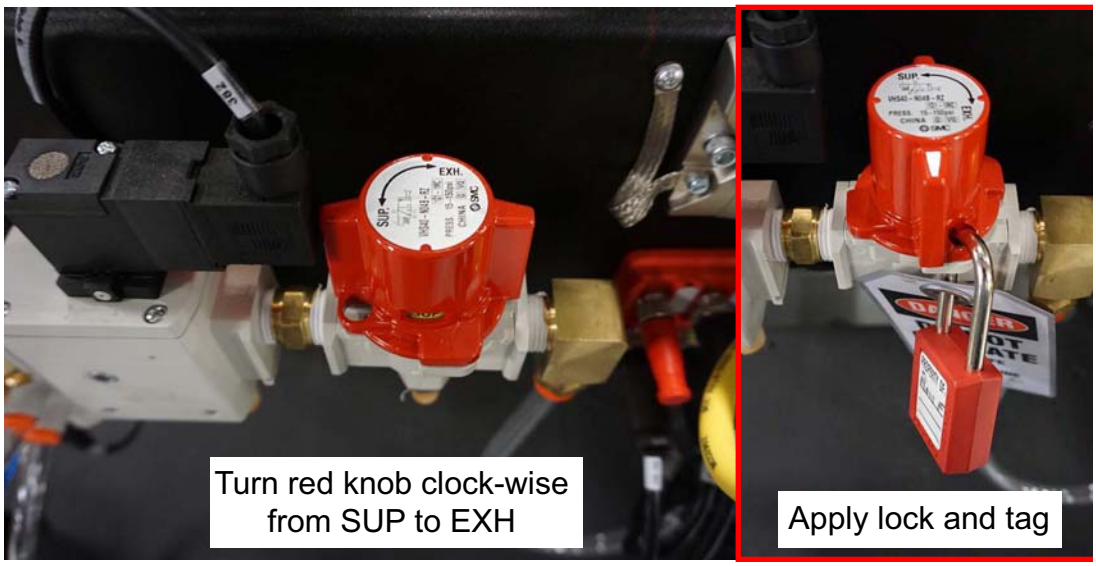


*Figure 2-7 - Lockout/Tagout at Pneumatic Regulator*

4. Verify that there is no air present. The machine is now pneumatically locked out.

### 2.6.3. Restoring power and air to the Machine

Restore the machine to proper working order by the following steps:

1. Ensure all personnel are clear of the machine.
2. Remove all tools and loose parts that may have been left behind from the maintenance procedure.
3. Replace all safety guarding that was removed for the maintenance procedure.
4. Remove locks and tags.
5. Notify affected employees that the lockout condition has been removed.
6. Restore power to the machine at the main disconnect.
7. Clear the machine using the human machine interface (HMI).
8. Ensure that any E-stops have been properly reset.
9. The machine is now restored to a run condition.


© ARPAC, A Duravant Company

# 3

# Mechanical Assemblies

## 3.1. Overview

ARPAC'S TrayStar™ 2000 Series is a high speed continuous motion tray packing machine. It's excellent flexibility, reliable performance and ease of use make it well suited to handle a wide range of product configurations and applications including: plastic bottles, cans, boxes, glass jars and more.

The TrayStar™ 2000 Series combines a number of mechanical assemblies to accept individual loose product from a customer's upstream processes and equipment and collates them into user defined configurations in order to place them in a cardboard trays.

This section identifies and explains the major assemblies and components of the equipment and how they work together.

NOTE

The Machine Controls and Operating Procedure sections of this manual that explain how the TrayStar™ 2000 Series constantly monitors and controls the product throughout the process and how to operate the machine also contain information related to these assemblies. Be sure to review those manual sections as well for a complete understanding.

| NOTICE |
| --- |
| **Additional Engineered to Order (ETO) assemblies related to a specific project, serial number or ARPAC OEM integrated production line purchased with this machine are included in an appendix at the end of the manual.** |

The TrayStar™ 2000 Series' mechanical assemblies explained here are grouped together in two categories; a product handling group and a tray handling, delivery and forming group.

| Assembly Group | Assemblies Included |
|---|---|
| Product Handling | In-feed Conveyor |
| | Lane Guides |
| | Product Accumulation Detector |
| | Fallen Product Detector |
| | Product Agitator |
| | Product Collator Clamp |
| | Collator Escapement Flight Bars |
| | Pacing Flight Bar |
| Tray Handling / Delivery & Forming | Extended Tray Magazine |
| | Blank Feed Magazine |
| | Lugged Blank Feed Conveyor |
| | Tray Former |
| | Compression Section |
| | Hot Melt Glue System |

*Table 3-1 - TrayStar™ Assembly Groups*

The foldout on the following page shows where each assembly is located.


*© ARPAC, A Duravant Company*

*© ARPAC, A Duravant Company*

## *3.2.* Product Handling / Delivery Group

### *3.2.1. In-feed Conveyor*

The In-feed conveyor is an independently driven conveyor that receives the product from the customer's conveyor and advances it to the Collator Clamp. It is located at the front of the machine.

The In-feed conveyor is a vital part to the machine's consistent operation by providing constant control of the product as it is being configured. It consists of several assemblies designed to delivery product to the Collator assembly.

## *Mechanical Design Features*

- Conveyor belt is modular plastic selected to fit the application.
- Conveyors are equipped with various sets and types of lane guides that direct the product from one common lane into the required configuration.

Guides to create individual lanes

Side guides only
for flood-feed applications

*© ARPAC, A Duravant Company*

## *Control Functions*

- The In-feed conveyor starts running after the machine is put into the cycle mode.
- The speed of the conveyor belt is determined by a user defined value entered into the HMI. Conveyor speeds need to be set fast enough to accept incoming product.

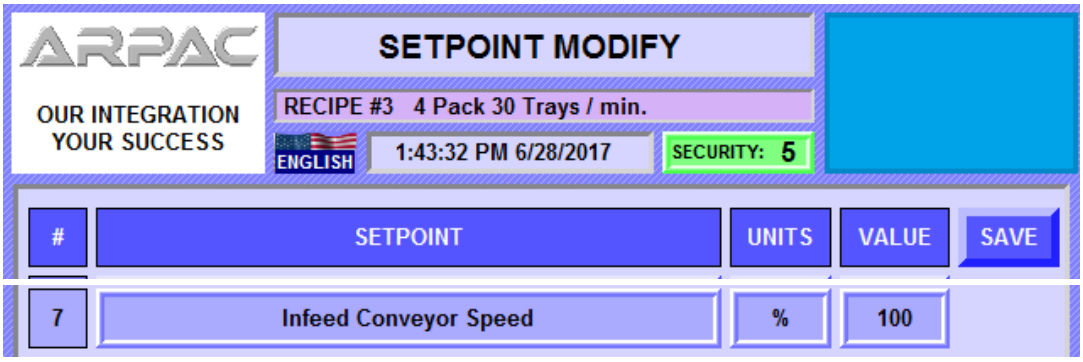


- The In-feed conveyor has multiple product sensors to control the flow of product.

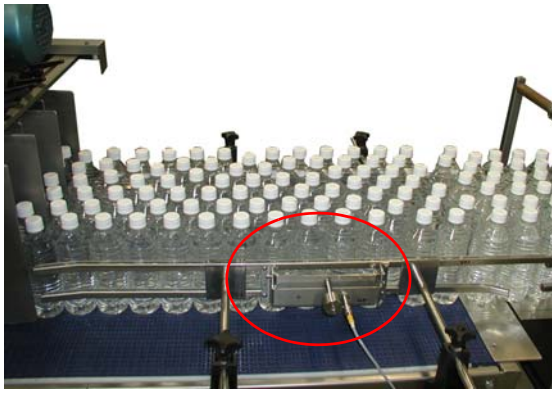

*Figure 3-1 - Example of a maximum accumulation sensor*

*Figure 3-2 - Example of a fallen product sensor*

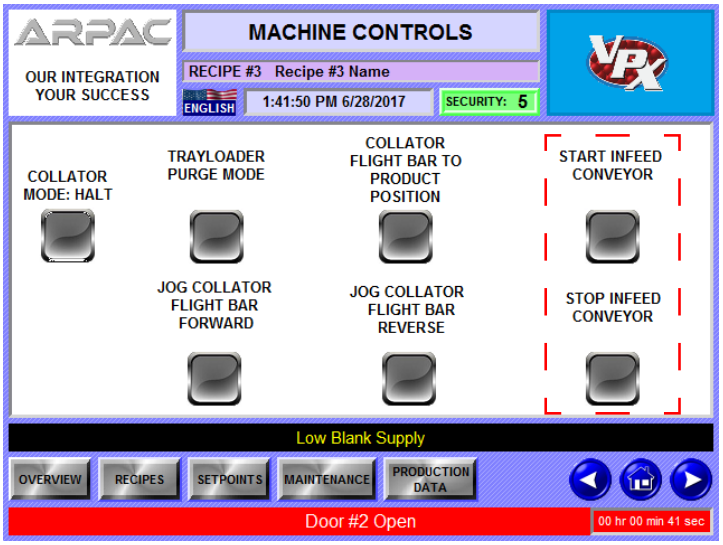


- The In-feed push buttons provided on the *Machine Controls* screen in the HMI can be used to run the In-feed when the machine is NOT in cycle.


*© ARPAC, A Duravant Company*

### *3.2.2. Product Agitator & Minimum Accumulation Sensor*

An oscillating Product Agitator, if required, is included to keep the product from stalling on the lane guides. The agitator is made up of a set of oscillating plates that gently agitate the product from side to side.

Product is maintained by guides in lanes as they advance. When enough product accumulates on the In-feed to create sufficient back-pressure at the Collator, the Product Accumulation Sensor is made.

## *Mechanical Design Features*

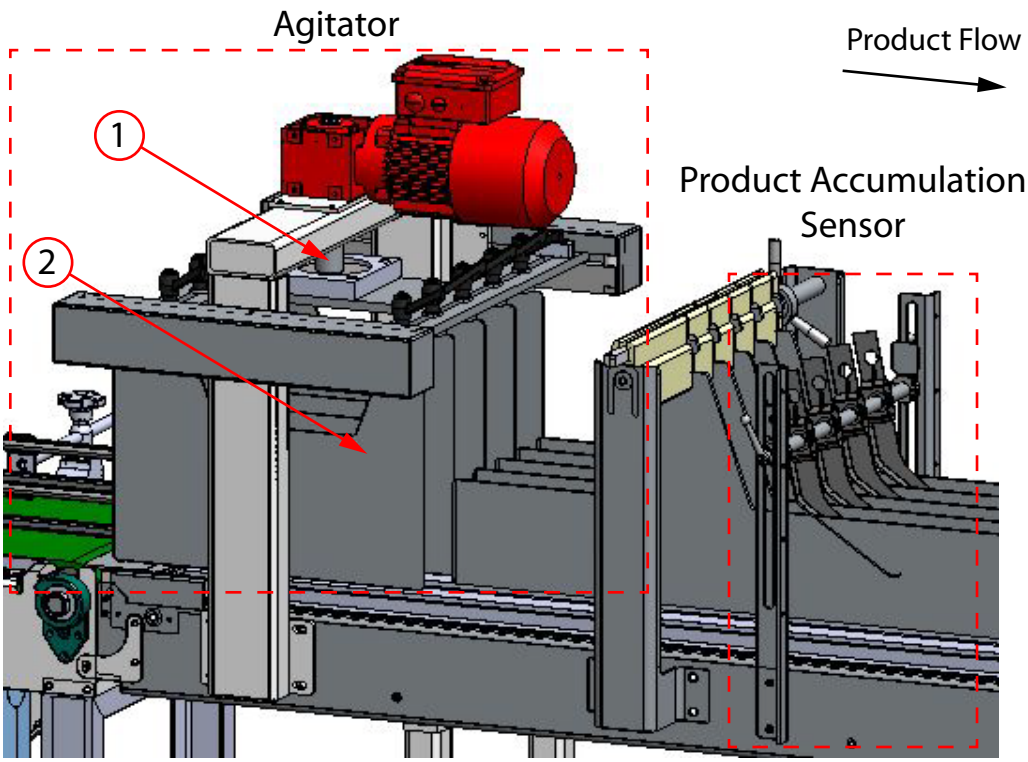


- A cam assembly connected to the motor (1) creates the oscillation of the set of plates (2).
- Tool less kip handles are provided for adjustment and quick changeovers.

## *Control Functions*

- Product flows from the agitator in their respective lanes past another sensor called the Product Accumulation sensor. This sensor sends a signal to the PLC that the lanes are properly filled in order for there to be the correct amount of back pressure at the Collator Clamp. The machine will not release product at the collator unless this sensor is made.


*© ARPAC, A Duravant Company*

### *3.2.3. Product Collator Clamp*

Creation of bundles is done at the Product Collator Clamp. Full lanes of product presented to the Collator are grouped together and released to the Collator Escapement Flight Bar assembly.

## Mechanical Design Features

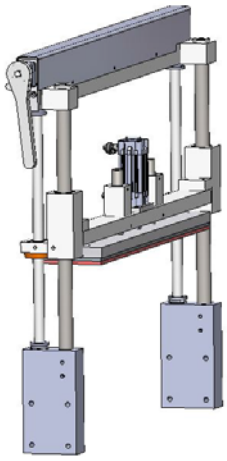

- Silicone sponge pad covers the clamp to prevent damage to product.
- Air operated

- Height adjustment screw with ratchet


© ARPAC, A Duravant Company

## *Control Functions*

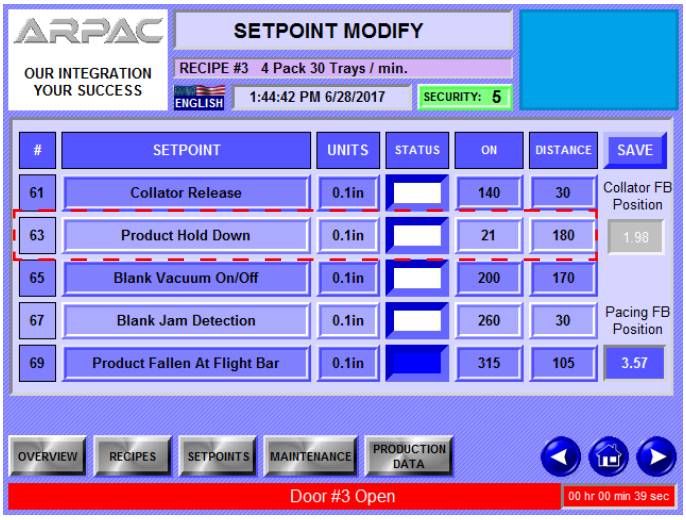


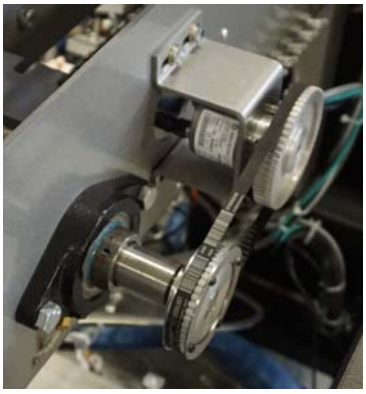

- Lifting and lowering of the clamp is control by user defined inputs. From the HMI, an operator can determine when the clamp turns ON and for how long, based off pulses from the Encoder.

### *3.2.4. Collator Escapement Flight Bars*

The Collator Escapement Flight Bars collate and release the product, now formed into "groups" to the Pacing Flight Bars. As the Escapement Flight Bar rotates, the Clamps retract long enough to allow the required number of rows to be released to the Escapement.

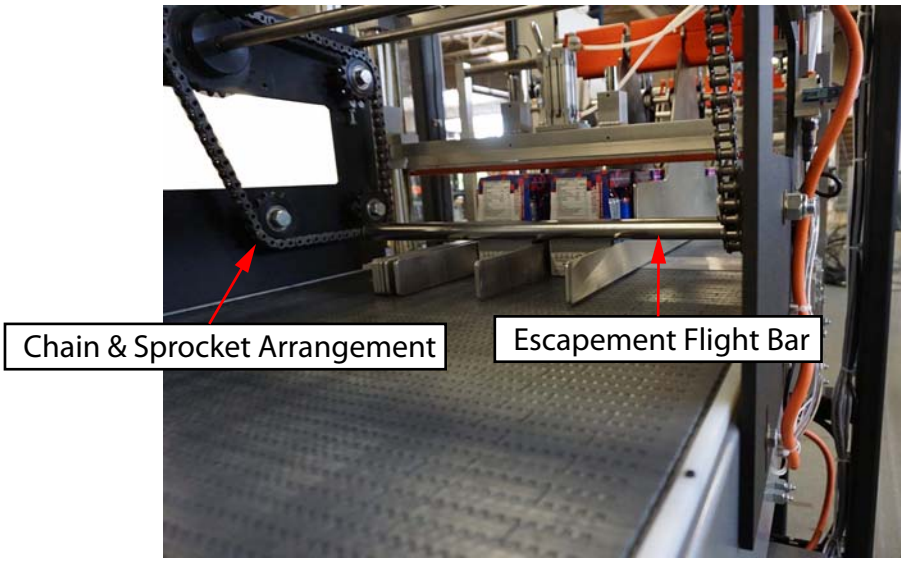


*Mechanical Design Features*

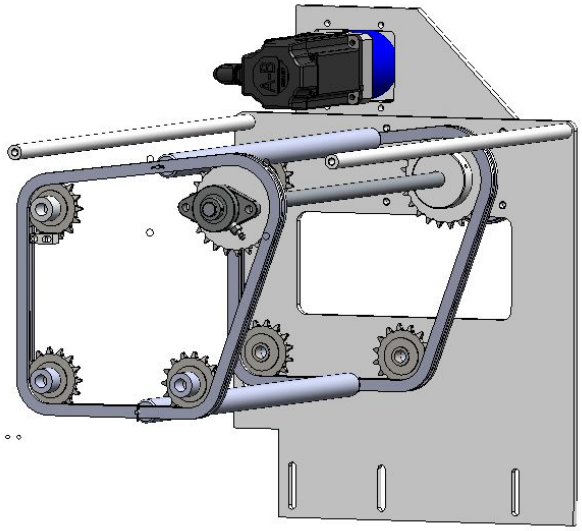

*Figure 3-3 - Escapement Flight Bar Assembly (shown here with one of the side plates removed)*

- Servo motor driven flight bars connected via a chain and sprocket arrangement.


*© ARPAC, A Duravant Company*

## *Control Functions*

The timing is determined by the encoder. After a predetermined number of pulses and timed with the Pacing Flight Bars immediately following the Escapement, the Escapement Flight Bars rotate for “X” # of pulses. As the Escapement Flight Bar rotates, the Clamps retract long enough to allow the required number of rows to be released to the Escapement.

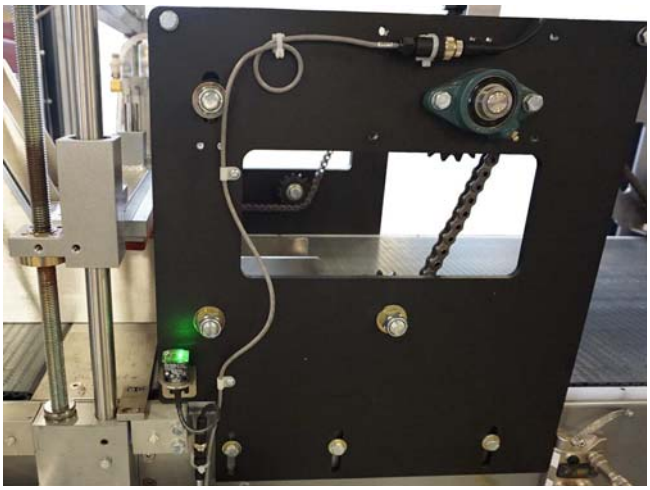

- The Collator Flight Bar Clear PE located at the upstream end of the assembly is used to ensure the flight bars are clear.

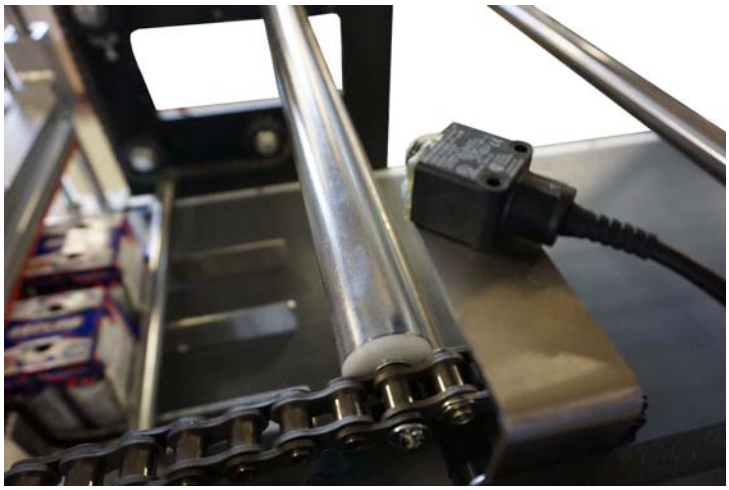

- Photo eye that is used to determine the Escapement flight Bars “home” and “off set” positions.

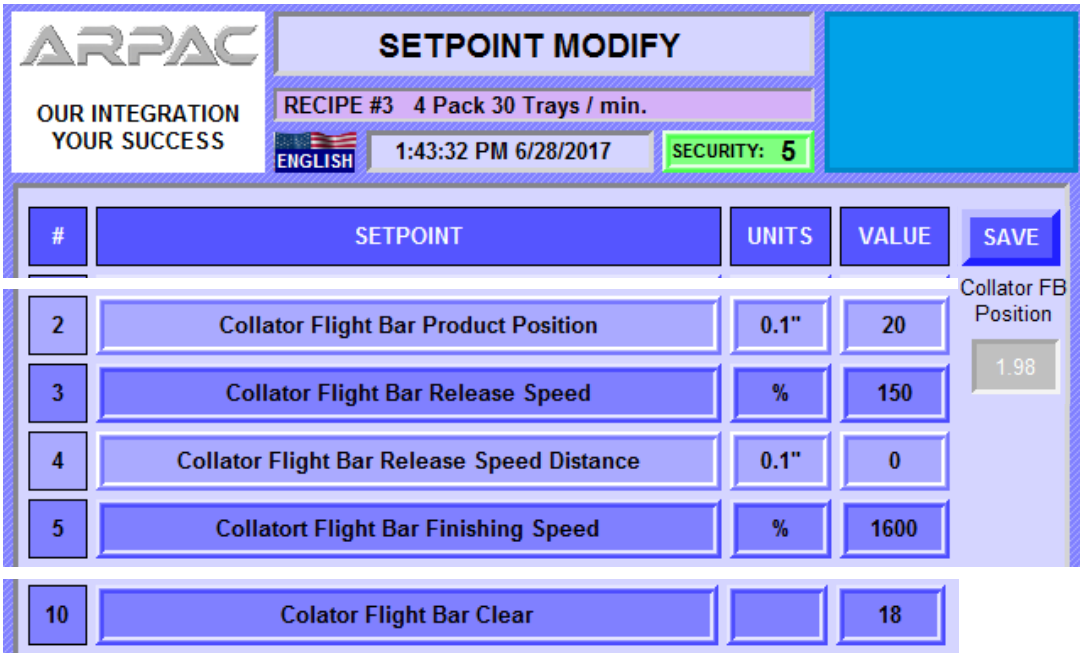


- The *Collator Flight Bar Product Position* parameter, also referred to as the *"Off-set"* position, sets the starting position of the escapement flight bars.
- The *Collator Flight Bar Release Speed* determines how fast the escapement flight bars move during the RELEASE portion.
- The *Collator Flight Bar Release Speed Distance* determines how long the escapement flight bars run at the release speed.
- The *Collator Flight Bar Finishing Speed* determines how fast the escapement flight bars move during the FINISHING portion.
- The *Collator Flight Bar Clear* parameter set the window for when the PLC looks to make sure product is clear of the escapement flight bars to prevent a jam.


*© ARPAC, A Duravant Company*

### *3.2.5. Pacing Flight Bars*

Product released by the Collator Escapement enters the Pacing Flight Bar area where the flight bars drop down behind them.

The pacing flight bar assembly is used to square the collated products and move them across a transfer plate and onto a tray blank at the beginning of the tray-forming conveyor.

## Mechanical Design Feature

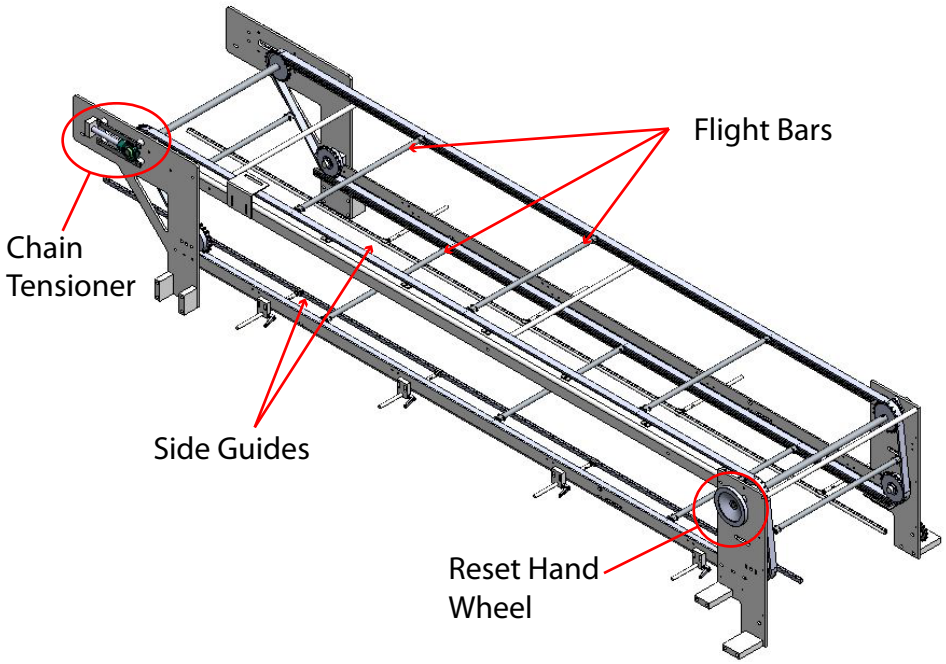


- The flight bars are specifically spaced bars driven by a chain and sprocket arrangement, attached to the main drive.
- The flight bars travel slightly faster than the conveyor belt therefore squaring the product group front to back.
- Side guides are used to hold the product square side to side as the flight bars move the product over a dead plate and onto a tray blank entering the main tray-forming conveyor. This ensures the product driven by the pacing flight bars correctly merge with an emerging tray blank from the blank lug conveyor.
- The pacing flight bars are equipped with a single point engagement torque limiter that operates a proximity switch that stops the machine if tripped.
- The flights bars must be manually advanced to reset the torque limiter if it trips.


© ARPAC, A Duravant Company

## *Control Functions*

- The pacing flight bars begin moving when the machine is put into cycle.
- Timing of a flight bar making contact with the product group should be just prior to the product making it to the dead plate.

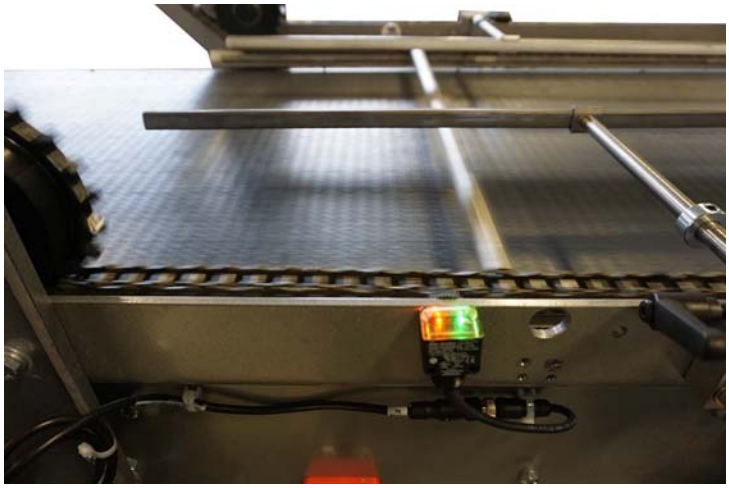

- Photo eyes mounted above the dead plate area detect product and initiate the tray blank feed. This ensures the product driven by the pacing flight bars correctly merge with an emerging tray blank from the blank lug conveyor.

- The photo eye location at the down stream end, near the dead plate, looks for fallen product, based of the user defined “window” entered in the HMI.

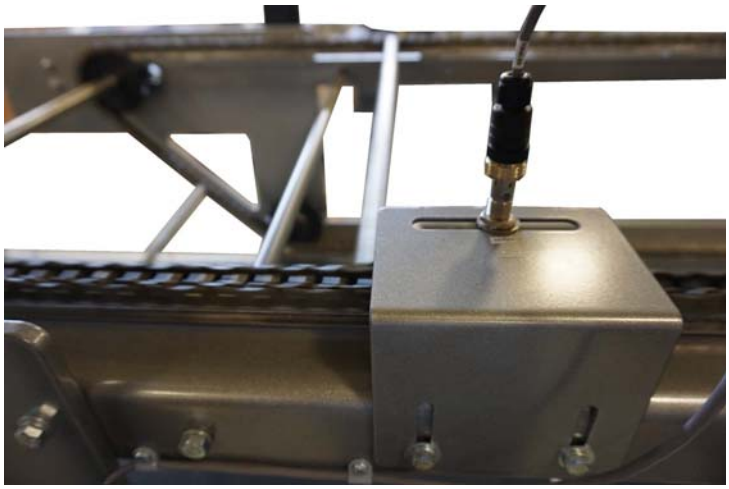

- The proximity switch located at the top of the upstream end is used to zero the Pacing flight bars.

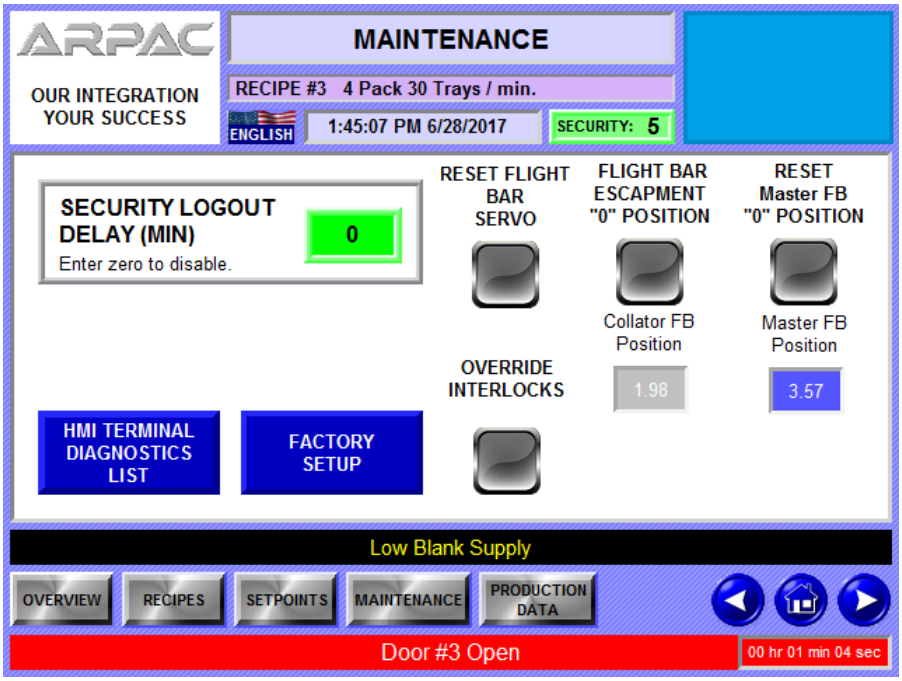


- A Set Point Modify screen accessed from the Maintenance screens of the HMI allow for resetting the flight bars zero position.


*© ARPAC, A Duravant Company*

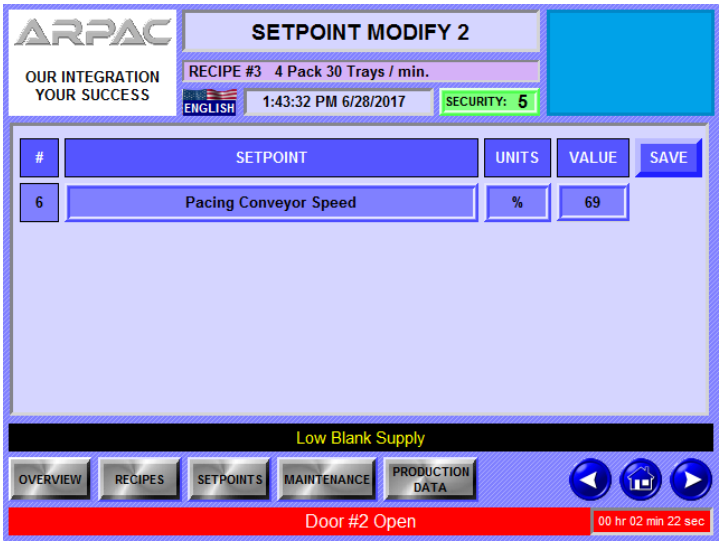


- The speed of the Pacing Flight Bar conveyor and the flight bars is set as a % of the Main Drive speed.

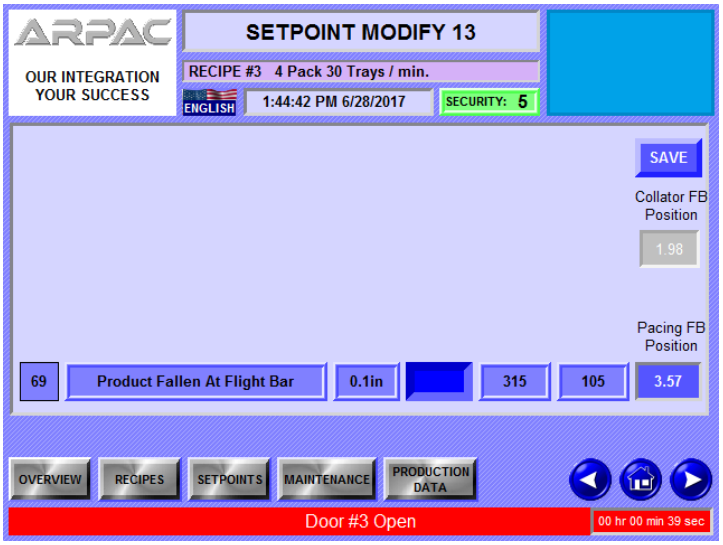


- The window for when the PLC looks for fallen product on the Pacing Flight Bar Conveyor is set in one of the MAINTENANCE screens in the HMI.

## *3.3.* Tray Handling / Delivery & Forming Group

### *3.3.1. Extended Tray Magazine*

The blank feed assembly is located parallel to the main machine behind the blank magazine. This assembly is used to store a supply of blanks that can be automatically fed into the blank magazine when needed. This assembly consists of a blank conveyor, blank lifter mechanism and a blank loader mechanism. This assembly is automated, but can be run manually by using the various push buttons.

*© ARPAC, A Duravant Company*

## *Mechanical Design Feature*

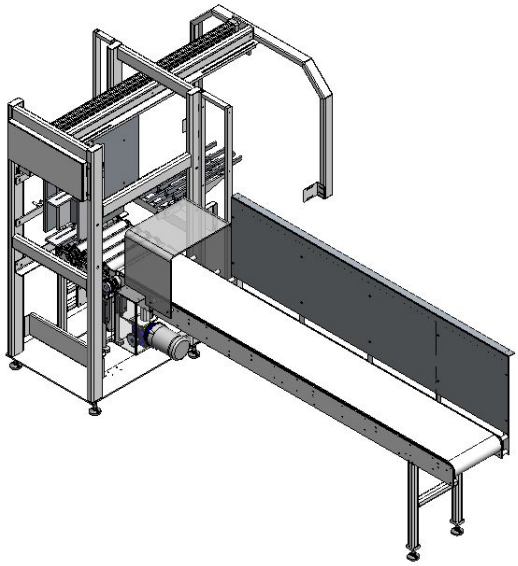

- The blank feed conveyor is an independently driven Intralox conveyor with rubber strips to grip the tray blank stacks as they travel to the blank loader mechanism. A side guide is used to help stabilize the blanks and helps the operator to square the stack as they load the conveyor.
- Blanks are loaded onto the conveyor manually by the operator. The blanks should be loaded on the conveyor in the same orientation as the blanks loaded in the blank magazine.
- The blank lifter is a pneumatically controlled device located in between the blank loader rollers. This device is used to elevate the position of the stack of tray blanks. This lifter is made of metal arms with Delrin material mounted to the top.

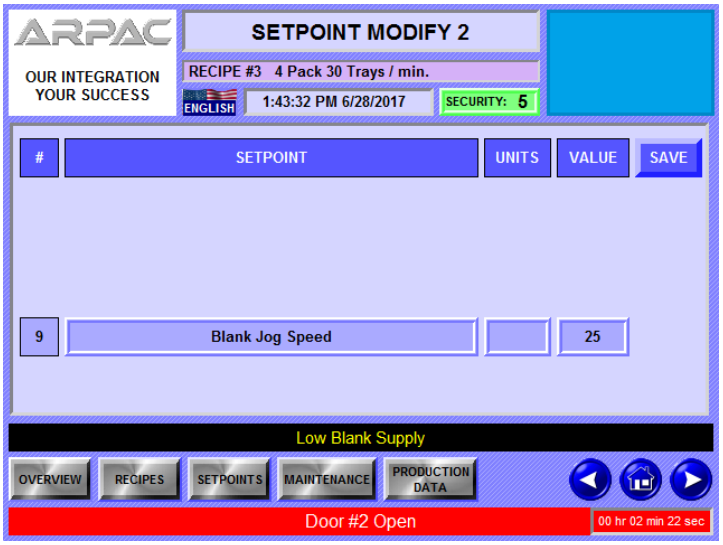


- The blank feed conveyor stops and starts intermittently at a speed determined in the HMI. Two conditions must be met in order for the blank feed assembly to operate: both the blank feed assembly power on push button and the main tray loader's power button must be pushed.
- As the blanks are indexed to the blank loader they block a blank in position photo eye mounted to the side of the blank loader mechanism. It will stop when either a stack of blanks is detected by the blank in position photo eye on the blank loader or until the blank in position photo eye remains unblocked for a preset amount of time.
- If the photo eye detects a stack of tray blanks, the photo eye will signal PLC to actuate the blank lifter mechanism. If the photo eye remains unblocked for a preset amount of time it will time out and the PLC will signal the conveyor to go into standby mode.
- The program is designed to signal the conveyor to begin indexing again after a specific amount of time. This allows the operator to reload the conveyor. The operator can either press the blank conveyor jog push button to restart the conveyor or wait until the PLC signals the conveyor to begin cycling.

NOTE

The *Power On* push button for the blank feed assembly is an illuminated, extended head push button. This button will light up when power is supplied to the assembly.


*© ARPAC, A Duravant Company*

WARNING

**Keep all hands and clothes away from this assembly. When the blank feed assembly is in the cycle mode there are many moving parts that sit idle for periods of time. Approach this assembly with caution and remember that the mechanisms move automatically.**

- Blanks enter the blank loader area and trip a blank in position photo eye. When the low blank supply photo eye on the blank magazine becomes unblocked it sends a signal to the PLC. This photo eye signals the PLC to actuate the blank lifter solenoid valve.
- Proximity switches monitor the position of the lifter. When the blank lifter up proximity switch is tripped the PLC signals the pusher to move forward. This action delivers the stack of tray blanks across the bridge and into the blank magazine. The blank lifter returns to its home position (lower) when the pusher returns to its home position.

### *3.3.2. Blank Feed Magazine*

The Blank Feed Magazine is positioned at a right angle to the machine, directly across from the Pacing Flight Bar assembly.

*© ARPAC, A Duravant Company*

## *Mechanical Design Feature*

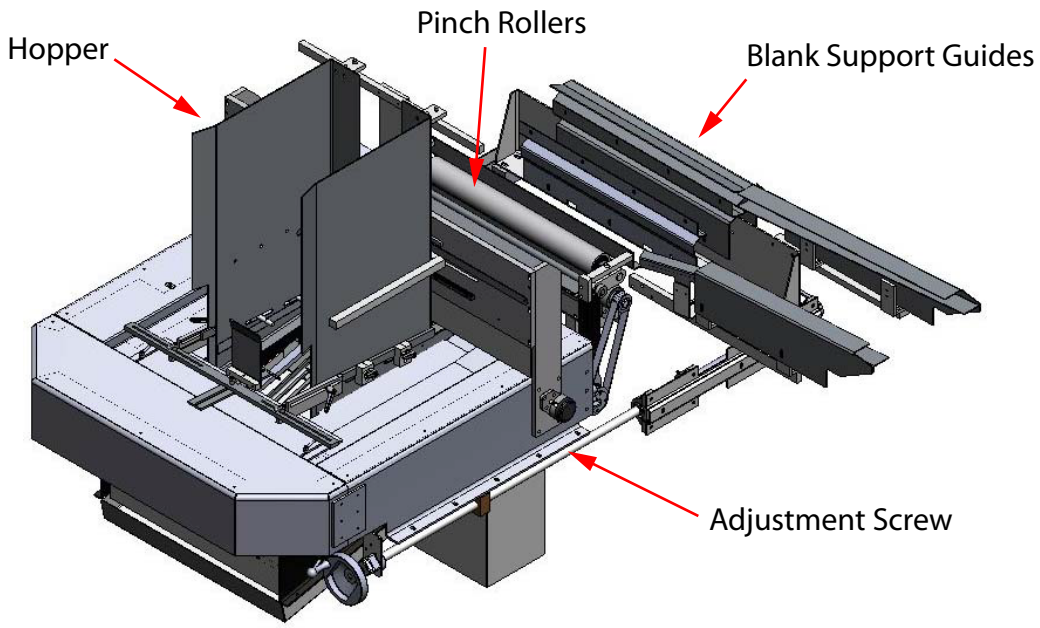


- Two assembled “L” shaped stainless steel plates form a vertical chute, referred to as the “Hopper”. The magazine will hold approximately 200 (1/8“ thick) tray blanks.
- Adjustable supports at the bottom of the magazine hold the column of tray blanks and provide resistance for the blank vacuum pull down system located below the magazine.

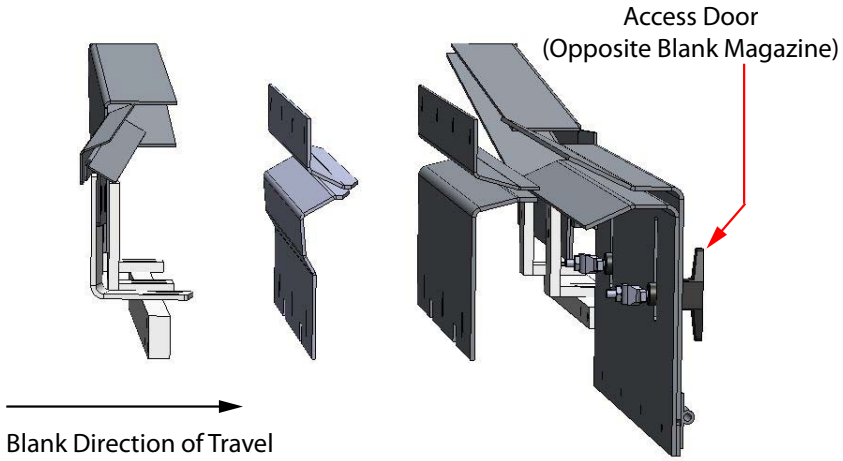


- Support Guides that follow the Pinch Rollers position the blank for the Lugged Blank Feed Conveyor.

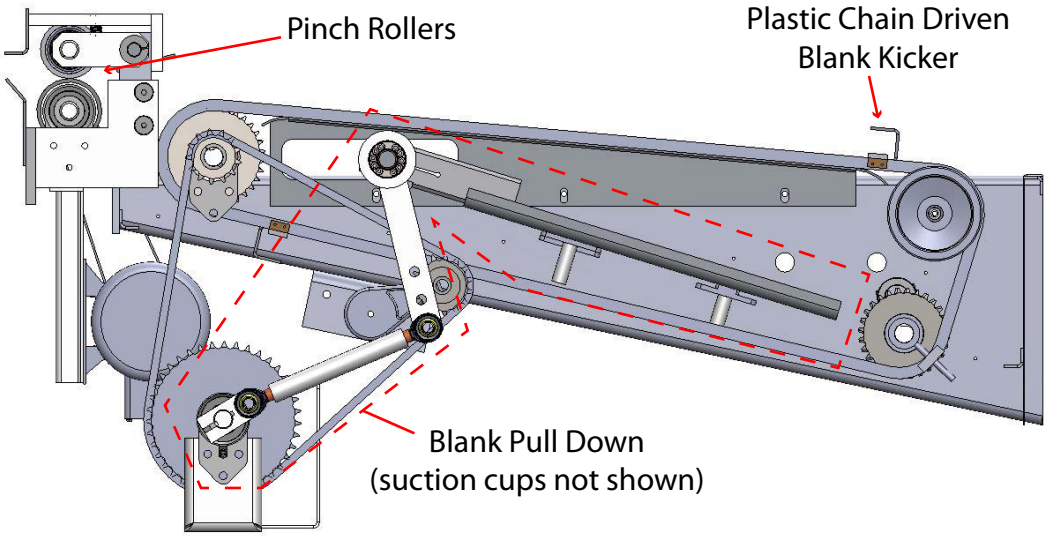


- The blank pull-down mechanism is located below the blank magazine. This mechanism pulls individual blank trays from the blank magazine and transfers them to the blank lug conveyor. Two vacuum cup arms attached to a spline shaft each hold two vacuum cup assemblies.

## *Control Functions*

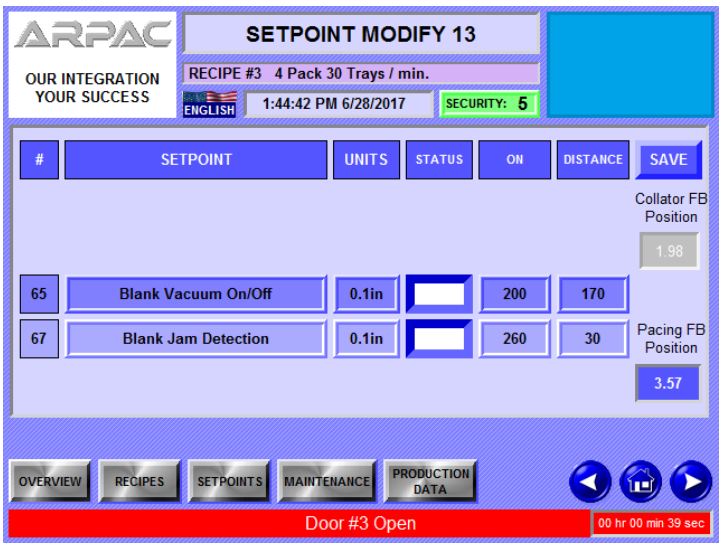


- Photo eyes located on the pacing flight bar conveyor detect the presence of product and send a signal to the PLC to start a timing sequence for the blank pull-down mechanism. As soon as the vacuum cup assembly has almost reached the blanks in the magazine, the vacuum suction is turned on. The cups then suction a blank, pulling it down toward the blank shelf. The suction stays


*© ARPAC, A Duravant Company*

on until the blank and the arm is almost back to the home position. As the arm completes its cycle to the home position, the blank falls to the blank shelf where it is swept away by the blank ejector conveyor.

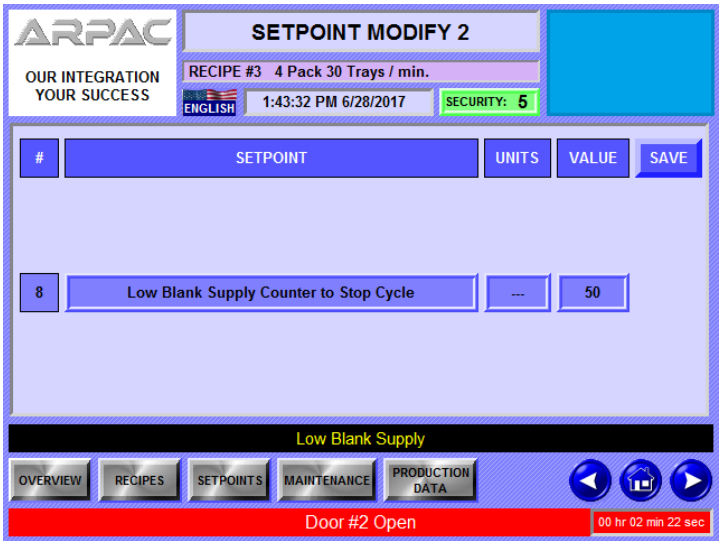


- A photo eye mounted to the magazine detects a low supply of blanks that sends a signal to the Extended Blank Magazine to feed another stack of blanks. An operator can set the number of cycles the machine will continue to run AFTER the PLC receives the signal from the Low Blank Detection PE.

- The blank pull down mechanism begins operating when the machine is put into the cycle start mode. The vacuum arms raise and lower whether or not a blank is present. This movement is mechanical in nature. Suction will only be generated if the product detect photo eye on the pacing flight bar assembly is tripped.

### *3.3.3. Lugged Blank Feed Conveyor*

The blank lug conveyor is located below the pacing flight bar assembly. This conveyor is constantly driven by and timed off of the main drive. It extends from the blank pull-down mechanism to the exit end of the pacing flight bar assembly.

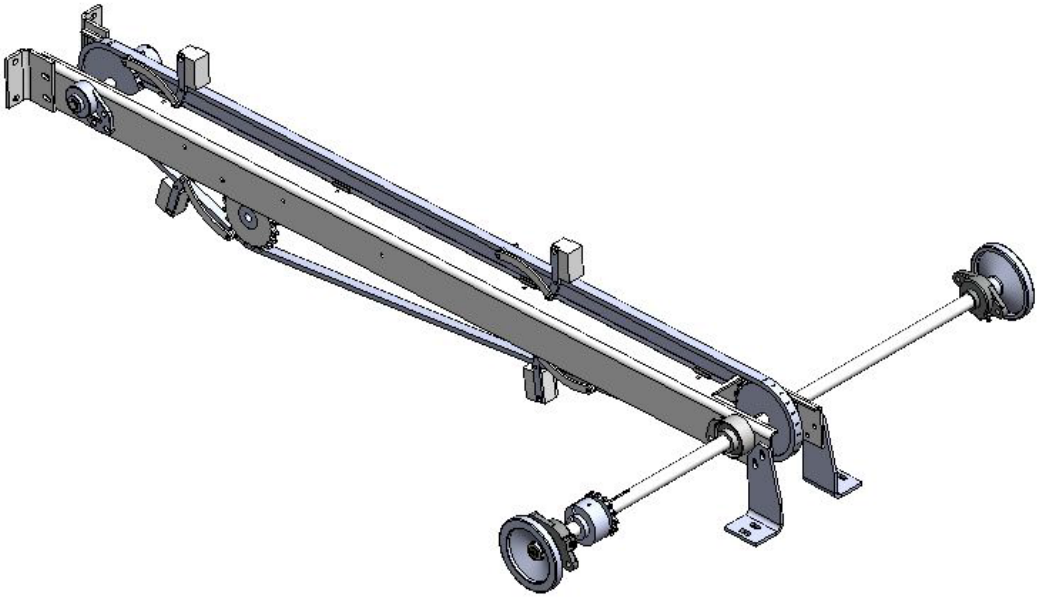

*Mechanical Design Features*

- Once the tray blank reach the end of the blank lug conveyor under the dead plate area, they are propelled out from below the dead plate area. Product being swept off the dead plate area by the pacing flight bars is merged with the tray blank as they meet at the beginning of the main tray-forming conveyor.


*© ARPAC, A Duravant Company*

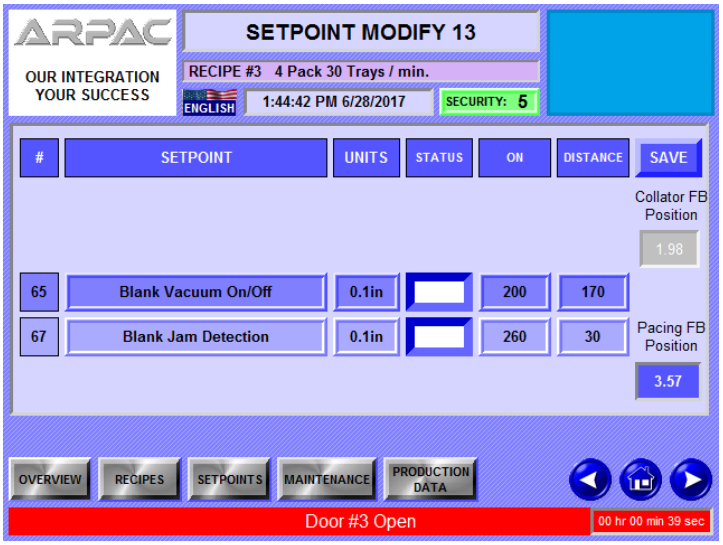


- Timing of feeding of blanks from the Blank Magazine via th pinch rollers is determined by the *Blank Vacuum On/off* “window’ set in the HMI. Feeding a blank needs to be timed with the Lugged Blank Feed conveyor.

### *3.3.4. Tray Former Assemblies*

The Tray Forming conveyor and assemblies are located after the Pacing Flight Bar area and extend to the exit end of the machine. The main tray forming conveyor forms and glues the tray blank around the product.

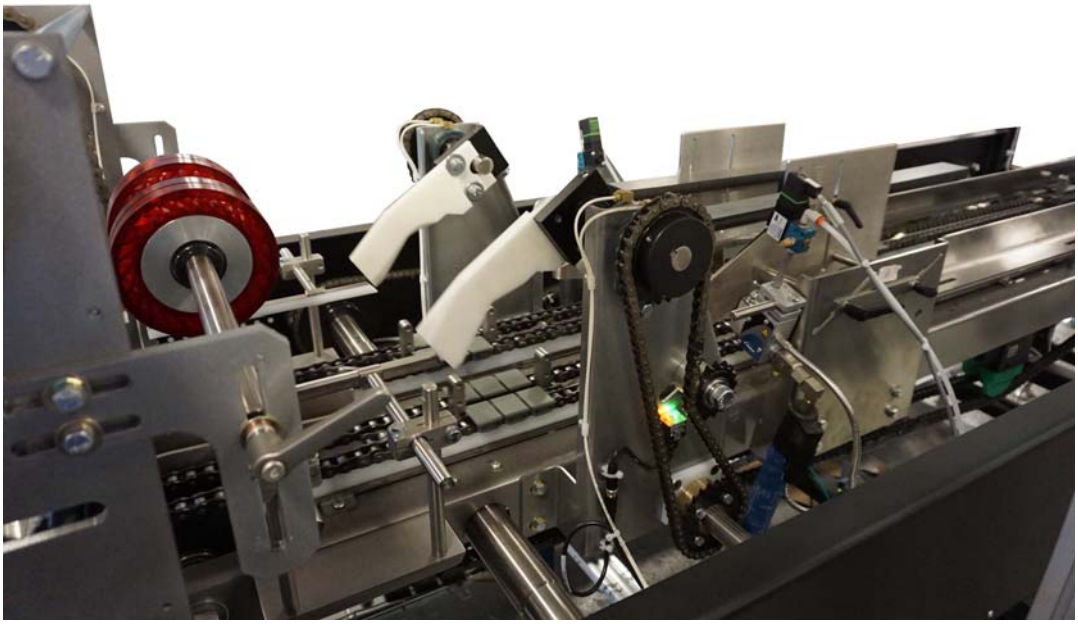

*Mechanical Design Features*

- The bundle and blank converge simultaneously after the Dead Plate. Here, the lugs on the Lug conveyor fold the long sides of the tray up as the bundle is slid onto the tray. Provided hold downs keep product on the tray blank.

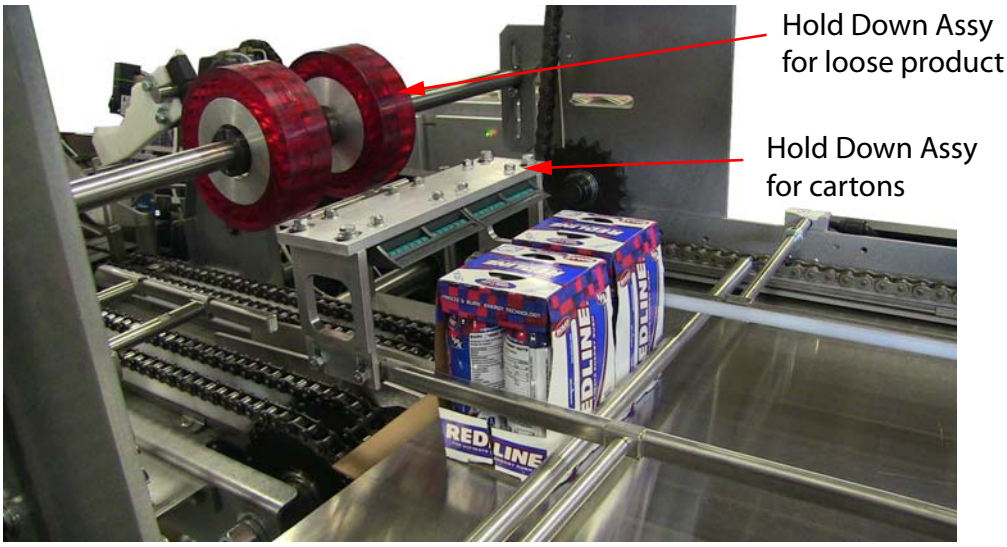



*© ARPAC, A Duravant Company*

- The loaded tray is advanced and the minor flaps are folded in. The tray is advanced further and a bead of glue is applied to all the minor flaps. The major flaps are then folded and pressed into the minor flaps.
- Four roller chain assemblies (left and right Leading Lug & left and right Trailing Lugs) form the pocket. Each roller chain has a set of articulated lugs mounted to the top of the chain. Two of the roller chains are positioned so the lugs are in a leading position and the other two chains are positioned in a trailing position. This chain and lug configuration holds the product and trays in place as the assembly folds and glues the tray. The distance between lugs can be adjusted to accommodate different size trays.

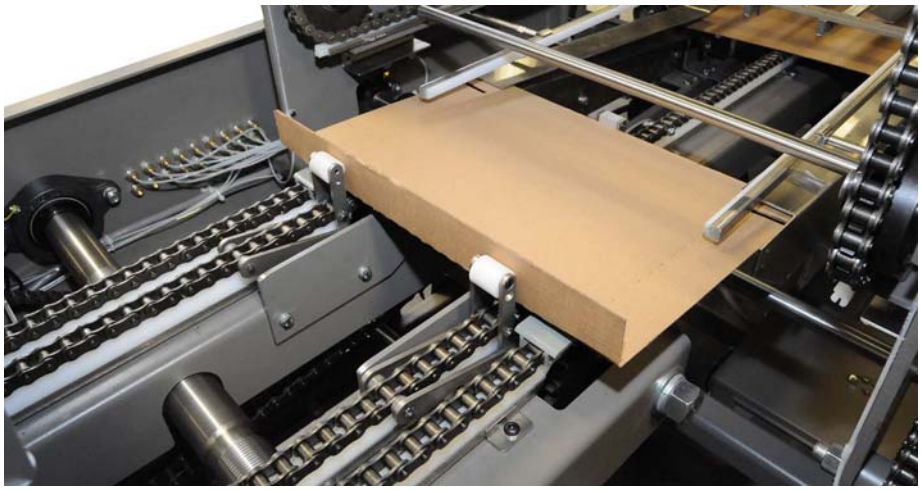

- At the point where product and blank merge on the main tray-forming conveyor, the flap of the tray's leading edge is folded up.

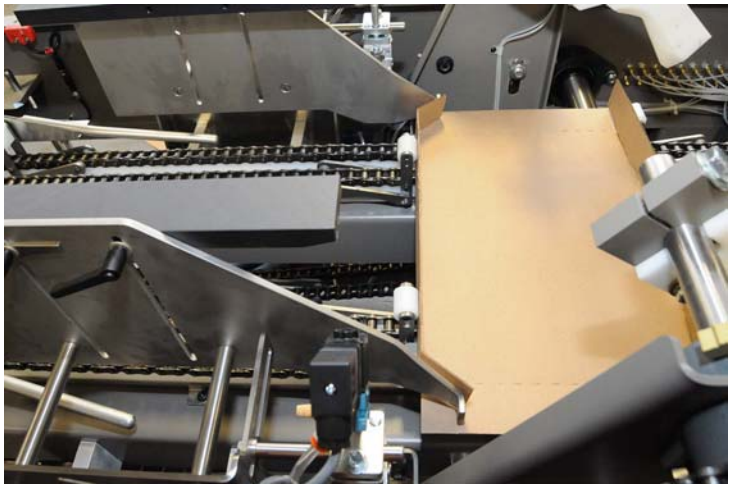

- As the tray and product continue moving forward, minor flap tuckers fold in the tray's trailing minor flaps.

- The horizontal side guides keep the flaps in place while the glue guns apply a glue pattern on each minor flap.

- Immediately after the glue is applied to the tray's minor flaps, an angled guide on each side of the conveyor folds the major flap up to meet the minor flaps. Once folded, the flaps are held closed by the compression. By the time the tray reaches the end of the compression rails the glue is set.

### *Control Functions*

- Open flap photo eyes mounted to each side of the main tray forming conveyor after the compression section identify if flaps have not been glued properly. If these photo eyes are blocked they send a signal to the PLC to stop the machine cycle and an error message is displayed on the operator interface.
- If the flaps jam, the machine will trip the torque limiter and an error message will appear on the operator interface indicating that the torque limiter must be reset.


*© ARPAC, A Duravant Company*

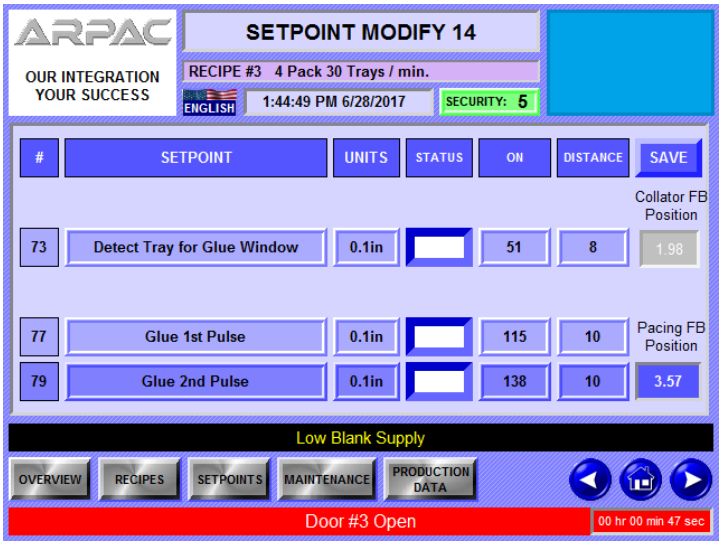


- The glue gun nozzle heads point down toward the major flaps to spray glue as the tray passes.
- Application of glue to the minor flaps of the blank is determined by the values of the *1st And 2nd Glue Pulse* settings.

### *3.3.5. Hot Melt System*

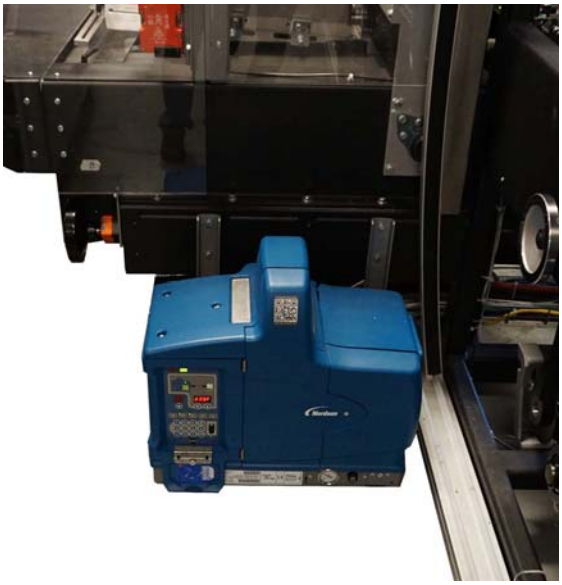

A hot melt glue system consisting a melt tank, hoses, glue guns and nozzles apply a predetermined amount of glue to the trays.


*© ARPAC, A Duravant Company*

### *3.3.6. Compression Section*

The final assembly of the machine is the Compression Section.

- Angled guides hold the front and back panels in place while the glue sets.

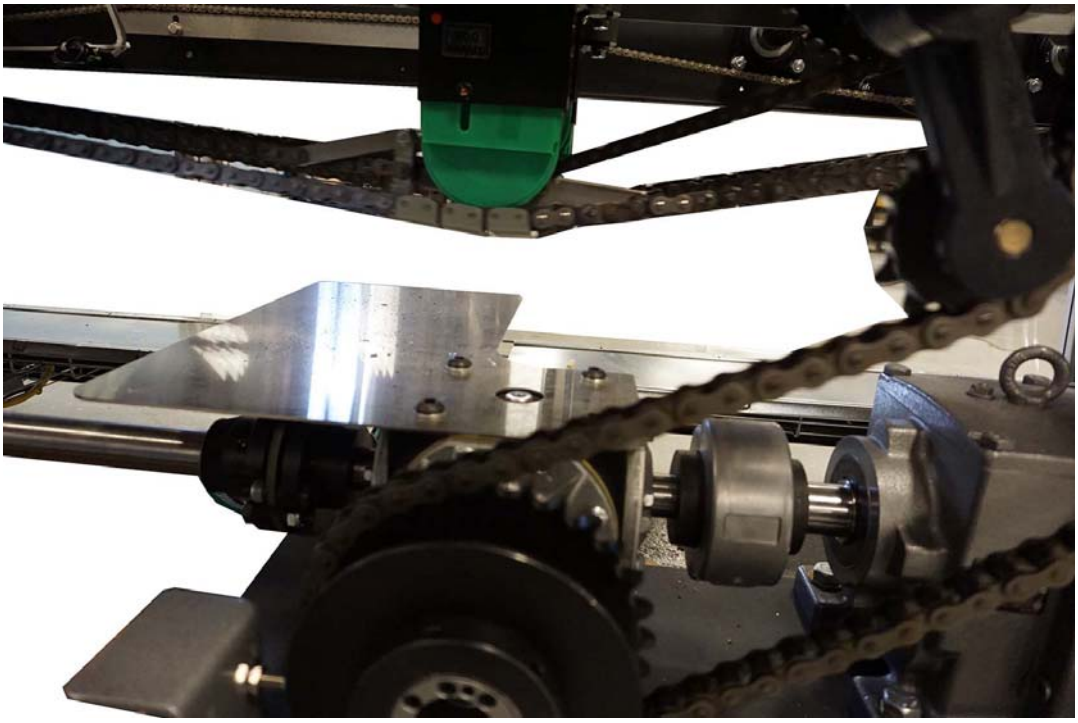

A chain tensioner located under the conveyor is provided due to normal stretching oft he chain.

*© ARPAC, A Duravant Company*

# 4

# Operator Controls

## 4.1. Main Disconnect (Power On) Switch

The Main Disconnect Switch, located on the Main Control Cabinet supplies power to the equipment.

*Figure 4-1 - Main Disconnect*

| |
|---|
| DANGER |
| **High Voltage. Electrical connection to main power supply required. Connections to be performed by qualified electricians only.** |

## *4.2.* Main Control Panel (Operator's Station)

The Main Control Panel, referred to as the Operator's Station, includes the HMI (Human Machine Interface) and push button controls. It is from here that an operator can monitor and effect the operation of the equipment. The operator station is typically mounted to a swing arm on the control side of the machine.

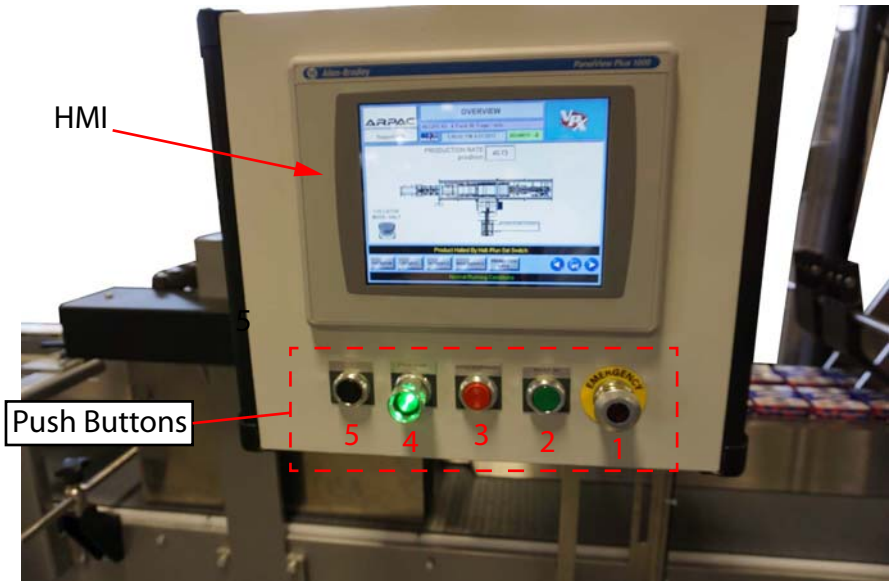


*Figure 4-2 - Operator's Station*

### *4.2.1. HMI (Human Machine Interface)*

The HMI, also referred to as the operator interface is a touch screen panel is used to change various settings of the machine. It also displays error messages when the machine experiences a fault or jam. It's use is covered more thoroughly later in this chapter.

*© ARPAC, A Duravant Company*

### *4.2.2. Push Button Controls*

Multiple push buttons mounted on the station provide inputs to the PLC to initiate the following:

1. **EMERGENCY STOP Push-Pull Button** - Pressing this button will immediately shut down the machine. The button must be pulled out before restarting the machine. This button is also located at various points around the machine.

2. **POWER ON -** Pressing this button turns the machine on.

3. **CYCLE STOP RESET Button** - Pressing this button stops the machine after it has completed a full cycle. Pressing this button will also clear error messages on the machine's interface after the problem that caused the message has been resolved.

4. **CYCLE START Button** - Pressing this button will start the normal production cycling of the machine.

5. **JOG Button** - Pressing and holding this button will jog the machine's conveyors without feeding blanks. The machine will stop when the button is released. This button can only be used when the machine is not in cycle.

### *4.2.3. Status Indicator Beacon*

The stack light provides a visual and audio indication of the status of the machine.

.

- Solid Red indicates an emergency stop push-pull button is tripped.
- Flashing Red indicates a fault or alarm situation.
- Solid Amber indicates the blank magazine is getting low.
- Flashing Amber indicates the machine is in the override or interlock mode.
- Solid Green indicates the machine is in the cycle mode.
- Flashing Green indicates the machine is going into or coming out of the cycle mode. Also indicates that machine is in standby mode because it received an outside signal from an upstream or downstream sensor to stop.


*© ARPAC, A Duravant Company*

## *4.3.* Blank Magazine Control Panel

The Extended Blank Magazine has a set of push button controls.

1. **EMERGENCY STOP Push-Pull Button** - Pressing this button will immediately shut down the machine. The button must be pulled out before restarting the machine. This button is also located at various points around the machine.

2. **CYCLE STOP RESET Button** - Pressing this button stops the machine after it has completed a full cycle. Pressing this button will also clear error messages on the machine's interface after the problem that caused the message has been resolved.

3. **BLANK LOADER JOG Button** - Pressing this button will jog the Blank Loader assembly.

4. **BLANK LIFTER JOG Button** - Pressing this button will jog Lifter assembly.

5. **BLANK CONVEYOR JOG Button** - Pressing this button will jog the Blank feed conveyor forward.

## *4.4.* HMI (Human Machine Interface)

The HMI (also referred to as the operator interface) is the operators primary means of directly interfacing with the equipment. The HMI is a color touch screen that allows the operator to monitor and change the operation of the machine. The HMI is a component of the electrical control system. It is a programmable device that communicates directly with the machines PLC control system via direct cabling or an Ethernet device. Typically, but not always, it is mounted on the main electrical cabinet along with the other operator controls called the “Operator Control Station”.

The program logic is based off the concept of treating products and the number of configurations required as “recipes”. Each recipe contains the machine settings, (set points) required to properly control the flow of product through the machine. Using recipes allows for a single machine to be used for multiple different products and configurations.

**⚠ Caution**

**Do not use anything but your fingers to operate the interface’s touch screen. Using pens or pencils to contact the touch screen can easily damage it and it is very expensive to replace.**

The following sections provide an understanding of the HMI and how to navigate the different HMI screens, as well as explaining the different screens and their functions.


*© ARPAC, A Duravant Company*

### 4.4.1. Screen Layouts & General Operation

HMI screens are categorized, or grouped together according to their function and purpose. Screen groups for the TS-2000 Series are; the Overview, Recipes, Set Points, Maintenance and Production groups. The appearance and layout of the screens have many things in common.

#### Screen Layouts

Below is an image of the Control screen. This example is used to explain how the HMI screens are laid out.

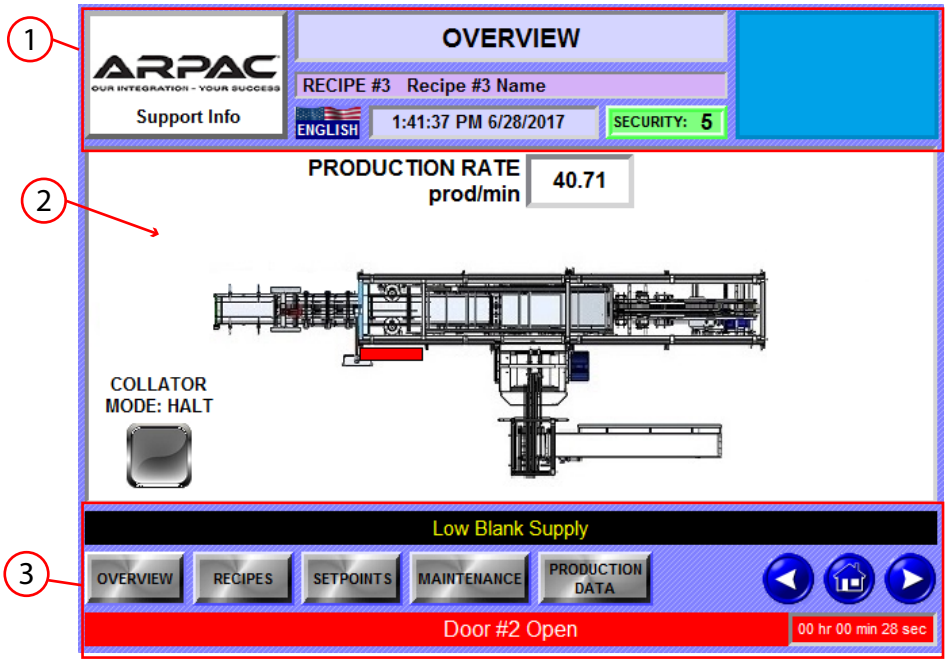


*Figure 4-3 - Screen Layouts*

#### 1. Title Block

There's a title block at the top of each screen. The title block displays the name of the screen, the current date and time and the security level currently accessed.

#### 2. Main Body

The main body of the screen displays information related specifically to it's purpose. It may also contains push button control for certain functions. Push Buttons - there are two types of push buttons used; "momentary" and "maintaining".

- Momentary buttons change "states" (on/off) as soon as the are released

- Maintaining buttons, when pressed, maintain that state until pressed again. These buttons may also change color, for example, from gray to white or green to red.

Grey-ed out push button, like the “Jog Selection” boxes in the example above are disabled, meaning they are currently inactive.

### *3. Menu Group Buttons & Message Banners*

The bottom of the screen contains a button for each menu group, a message banner and toggle buttons. Pressing one of the menu group buttons will navigate to and open the first screen (some menu groups have multiple screens) for that group. The menu groups are password protected. The Over View and Set Point menu groups contain the control functions and parameter settings to effect the operation of the equipment. The Maintenance menu group contains diagnostic data and high level settings. The Maintenance menu group should only be accessed by qualified individuals. The Production Data menu group contains production efficiency data and should only be accessed by supervisory/management personnel. Menu groups are discussed in greater detail later in the chapter.

The message banner displays the current status of the machine; i.e. running condition, faults and warnings.

The toggle buttons can be used to cycle between the screens of menu groups with multiple pages.


*© ARPAC, A Duravant Company*

### 4.4.2. Data Entry & Navigating to Different Screens

The interface is equipped with two objects for data entry [numeric and string (i.e. text)]. If the interface is at a sufficient security level for a particular function, the keypad or keyboard opens when an operator touches an object calling for data entry.

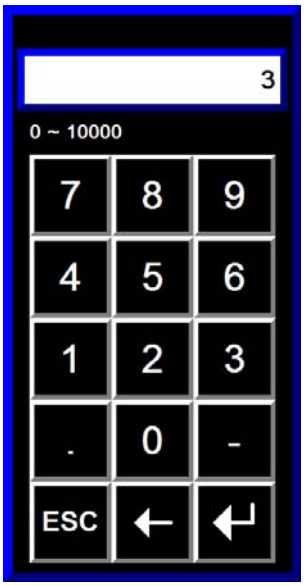


*Figure 4-4 - Numeric Keypad*

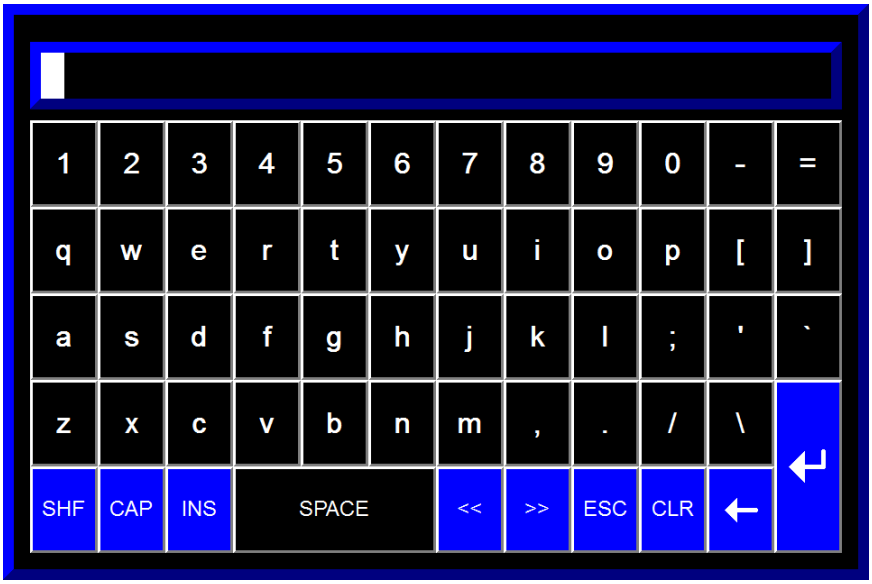


*Figure 4-5 - Alpha-numeric Keypad*

## *Navigation Tools*

To navigate directly to a specific screen within a Menu Group that has multiple screens, press the button for that screen from the expandable screen menu that pops-up when the Menu Group button is pressed, as long as an operator is logged in with sufficient security access. The toggle buttons in the lower right hand corner can also be used to navigate to the next or previous screen.

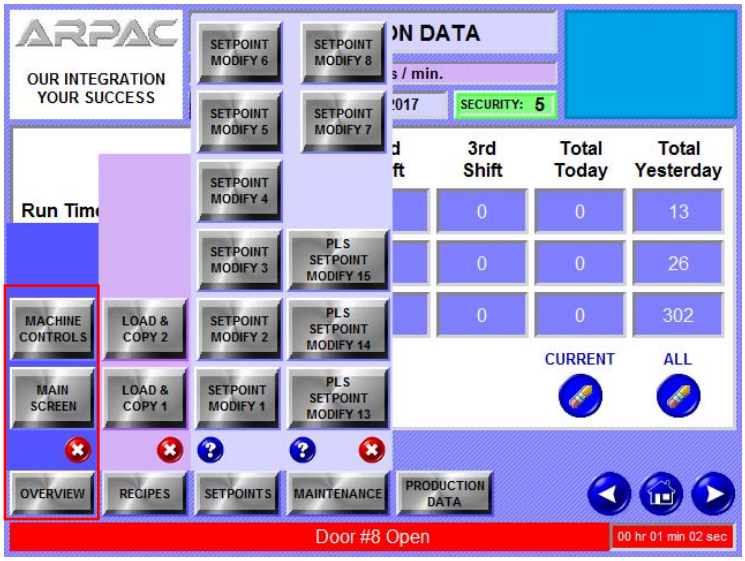


*Figure 4-6 - Expandable Screen Menu Pop-Ups*


*© ARPAC, A Duravant Company*

### *4.4.3. Security Levels*

There are three different security levels associated with the interface, not including "Level 0", the default security level upon power-up. Each progressive level offers a deeper level of access to controlling and monitoring the machine. The levels are as follows:

1. **Operator (O):** This gives access to basic running conditions; starting/stopping recipes, wrap mode, jogging functions.

2. **Maintenance (M):** This level is available to trained operators of the machine. It allows the operator to modify existing and make new recipes for different products into the machine and to change setpoints in the machine's operation. The operator must login to the machine and enter a password to gain access to this level

3. **Supervisor/Manager (S):** This level is available to trained maintenance technicians. It allows access to all functions of the machine. The technician must login to the machine and enter an password to gain access to this level.

NOTE

The default security level, Level 0, is available to all users and is active when the machine is first turned on. This level does not allow anyone to change anything, but it does allow the operator to view basic machine messages.

## *4.5.* HMI Menu Groups

The following explains the specific functions of each HMI menu group.

### *4.5.1. The Over View Menu Group*

The Overview group, in addition to being the “home” or “default” screen, is where the user monitors and controls the machine. Security level 1 or higher needed to access the following screens:

*Main Screen*

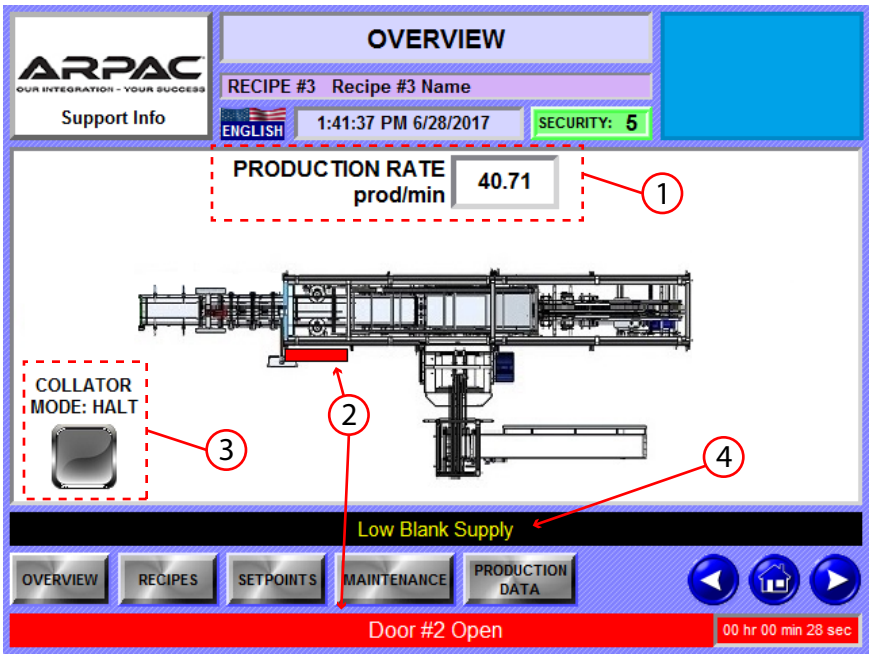


Displayed on the screen:

1. **Production Rate** - Displays the set production rate, based off user defined parameters.
2. **Machine Status** - Displays messages on the machines current status. In this example, guard door #2 is open.
3. **Collator Mode** - The text above the button indicates what mode the Collator is in.
4. **Warning Messages** - Warnings will be displayed. In this example, the Blank magazine is low.


*© ARPAC, A Duravant Company*

## Machine Controls Screen

The Machine Control screen is used to perform the following functions:

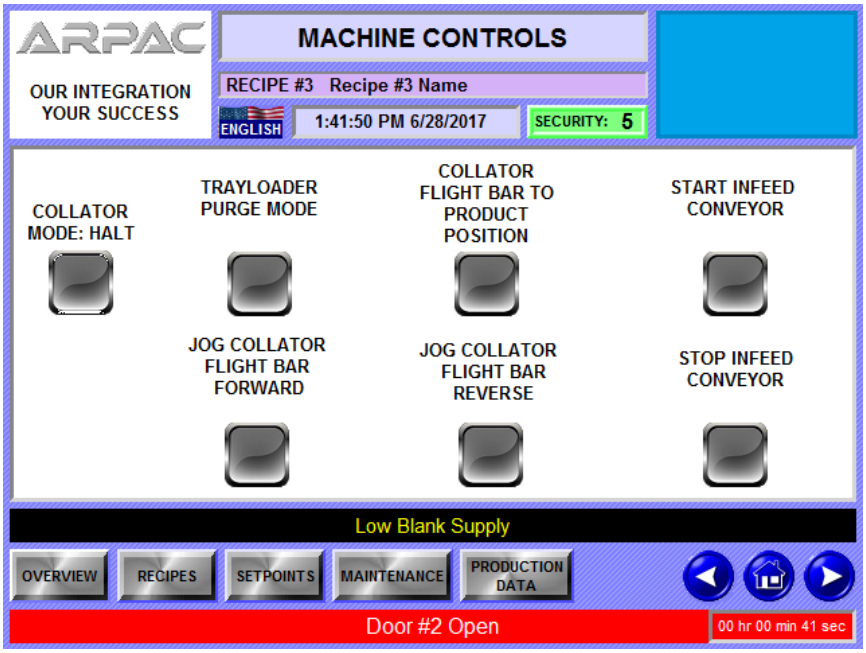


*Figure 4-7 - Machine Controls Screen*

- **Collator Mode** - This button is used to put the collator in stand-by (**HALT**) if an operator wants to stop the flow of product, but not stop the machine entirely. Press it again to put the collator back into **RUN** mode.
- **Tray Loader Purge Mode** - Used to override or ignore accumulation inputs from the In-feed conveyor in order to run out product for a changeover or at the end of production. This button is disabled when the machine is in cycle.
- **Collator Flight Bar to Product Position** - Used to return the escapement flight bars back to their starting position. Required after certain faults. This button is disabled when the machine is in cycle.
- **Start In-feed Conveyor** - Use this button to run the In-feed conveyor belt independently. Priming the conveyor with product is an example of when to use this feature. This button is disabled when the machine is in cycle.
- **Jog Collator Flight Bar Forward** - When the machine is not in cycle, a user can move the Pacing Flight Bars forward with this button.
- **Jog Collator Flight Bar Reverse** - When the machine is not in cycle, a user can move the Pacing Flight Bars backwards with this button.
- **Stop In-feed Conveyor** - Use this button to stop the In-feed conveyor belt if the *Start In-feed Conveyor* button was used.

### *4.5.2. Recipes Menu Group*

The Recipe Menu Group contains the screens from which an operator can view the available product Recipes. Each individual Recipes contains the unique settings for that product configuration.

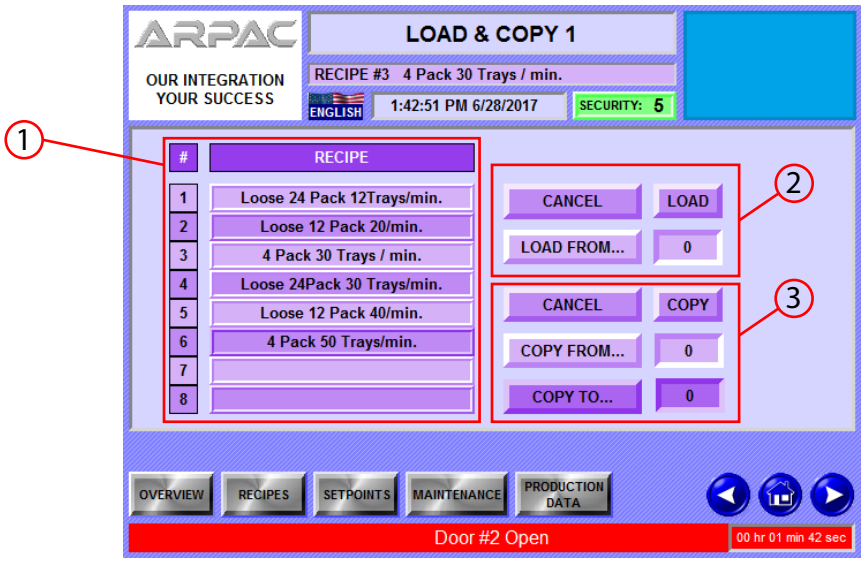


1. **Recipe # and Description -** A quick reference list containing all the product configurations that have been programmed into the HMI.
2. **Load -** Used to load an existing Recipe into the HMI.
3. **Copy -** Used to copy one Recipe into a different Recipes # slot. This is helpful when an operator has a new product configuration to create that is similar to another one to minimize the amount of information that needs to keyed in.


*© ARPAC, A Duravant Company*

## *View & Compare Screen*

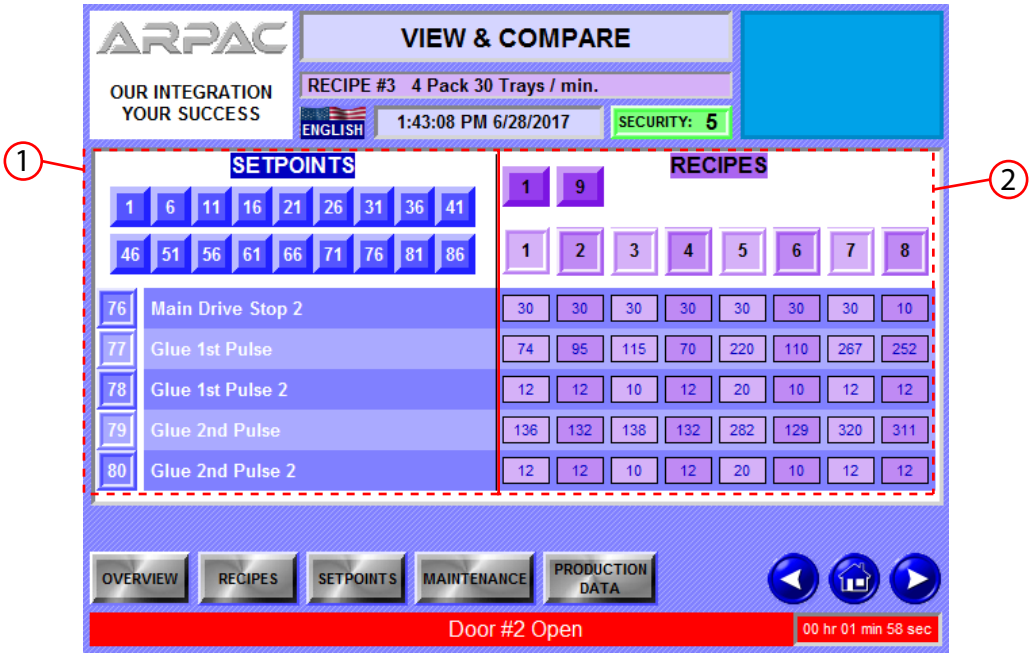


The View & Compare screen is used to compare recipe set-ups.

1. Select a group of parameters
2. Select two Recipes to compare

### 4.5.3. The Set Points Menu Group

The Set Points menu group consists of several screens containing all of the available set point parameters needed to adjust the performance of the machine. Each screen can contain up to five different parameters. Regardless of the number of available set point screens, they are all laid out the same.

#### *Set Point Modify Screens*

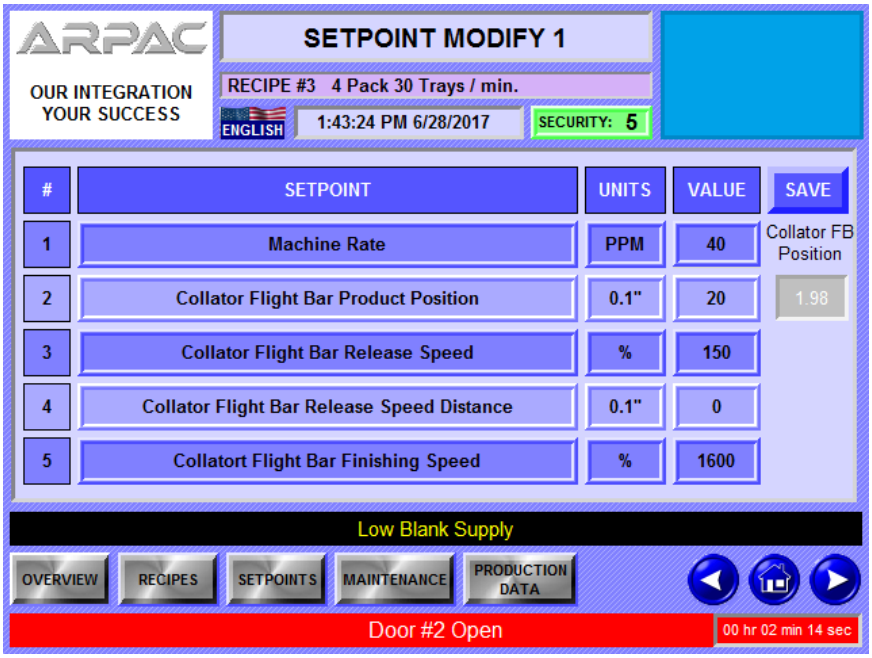


*Figure 4-8 - Set Point Modify Screen Example*

1. # - Each parameter is assigned a number
2. Parameter - The names of the parameters are listed next to the # column
3. Units - This represents the unit of measure for a parameter.
4. Value - This represents the actual setting value

NOTE

Parameter descriptions that say “Spare” or “Reserved” are available slots that are either not used by the PLC or are reserved by the PLC for available equipment options that are not a part of this system.


*© ARPAC, A Duravant Company*

## Changeover Point Screens

Several screens in the Set Point Modify group were included to store changeover related data. Changeover points have dial indicator readings or scales to mark their set point. These screens are used to store that data. An operator can refer to these settings to aid with changeover.

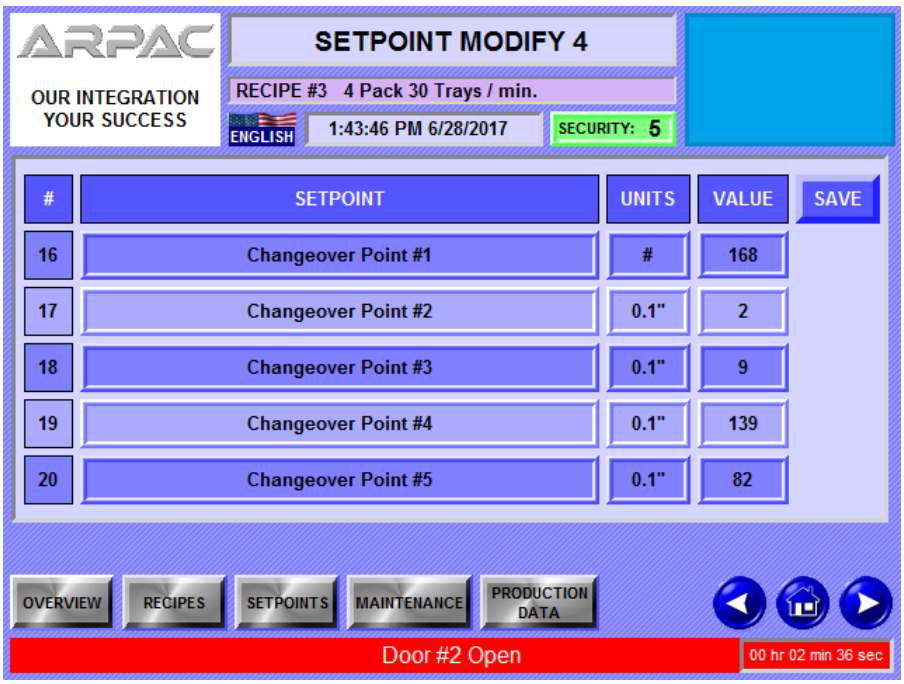

### 4.5.4. The Maintenance Menu Group

The Maintenance menu group allows a user to access various maintenance-level functions. This menu requires security level 3 or above for access.

*Main Maintenance Screen*

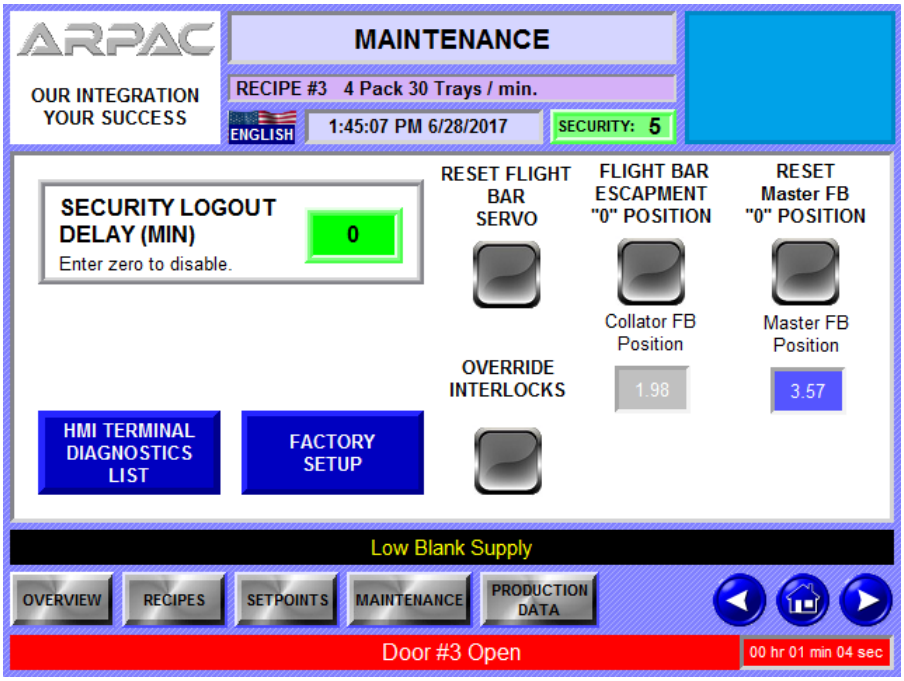


*Figure 4-9 - 1st Maintenance Screen*

From this Maintenance screen, qualified personnel can change the following:

- **Logout Delay** - Once someone logs in to a security level, that login remains active based on this setting. Once the Logout Delay times out, that person would need to re-enter the password.
- **Override Interlocks** - This machine is capable of being interlocked to other equipment immediately upstream or downstream. If these options are being used, an operator can override these interlocks if necessary by pressing this button.
- **Diagnostics List** - This button is used to view the communication protocol messages between the HMI and the PLC.
- **Reset Master FB "0" Position** - Press this button to reset the zero position of the Pacing Flights Bars to current encoder position.


© ARPAC, A Duravant Company

## Timers & Counters Screen

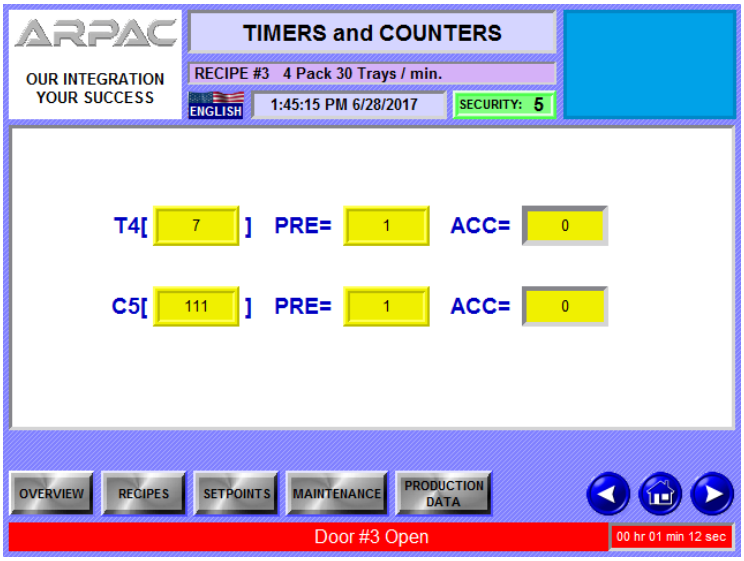


The Timers & Counters screen allows one to see preset parameter values and accumulated values, but does not list the specific timer description. This screen should be used as a diagnostic tool, along with the PLC code for troubleshooting.

## Alarm History

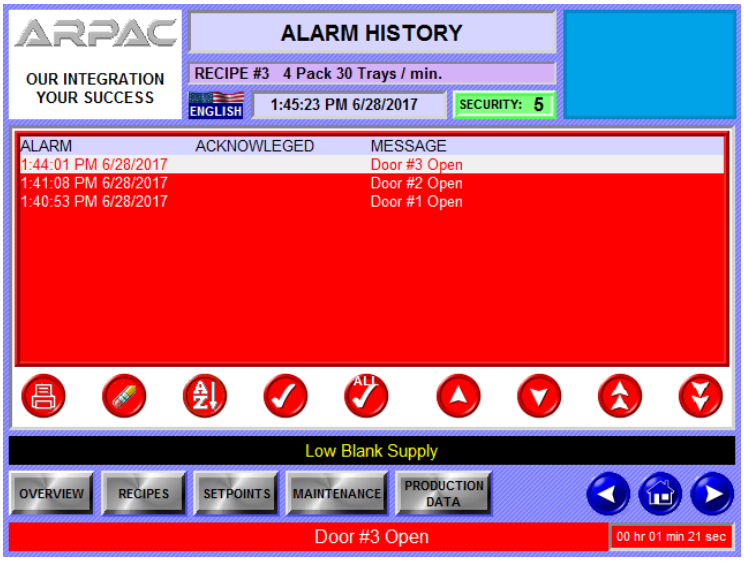


Alarm History shows alarms and faults that occurred on the system. Use the red buttons to acknowledge and clear the list, cycle from one to another or page up and down the list.


© ARPAC, A Duravant Company

## PLC Chassis Screens

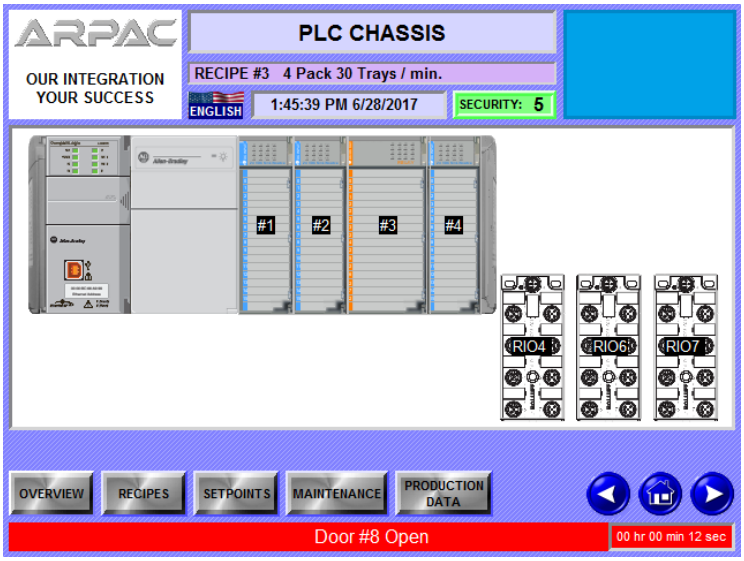


*Figure 4-10 - PLC Chassis Screen*

To aid with diagnosis of issues and troubleshooting, multiple diagnostic screens have been provided. Not all of them are covered here, but the concept for all the screen are the same.

Touching the screen where a text block exists will open an addition screen. The example below is the screen what would appear for the “Digital IN” text. A green box indicates the I/O is “ON” and a gray box indicates the I/O is “OFF”.

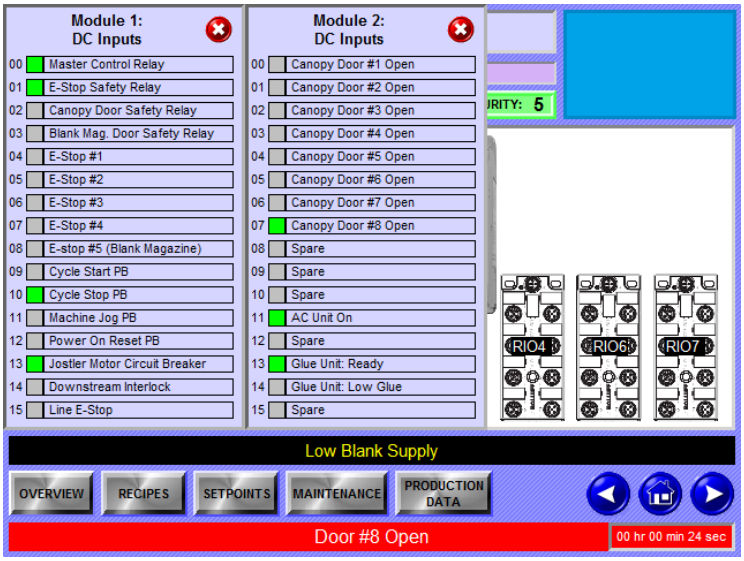

## *Maintenance Level Set Point Modify Screens*

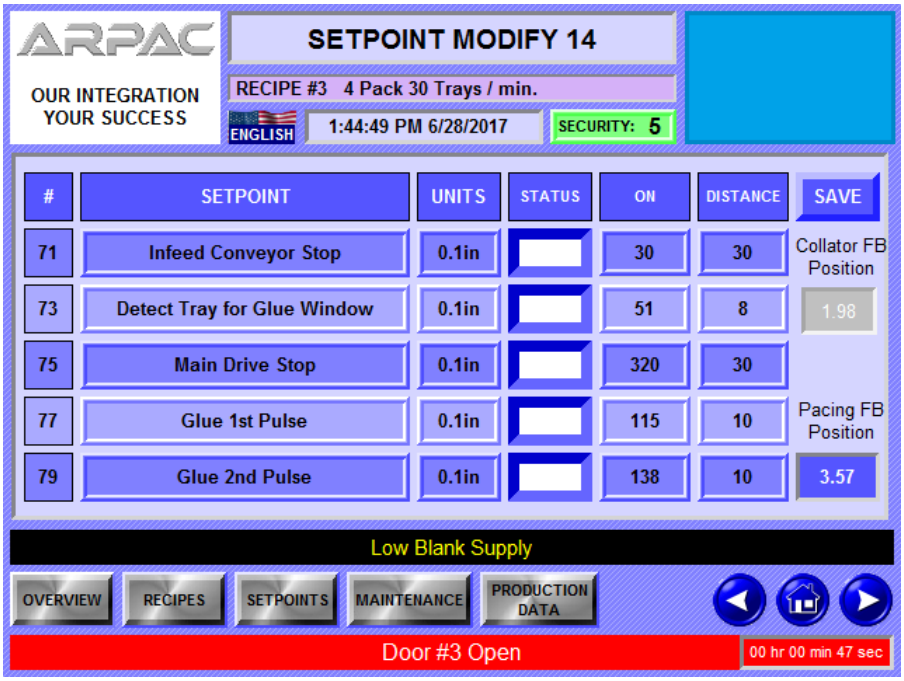


Several Set Point Modify screens, similar to those in the Set Point Modify group are included in the Maintenance group. These screens are included here and not in the Set Point Modify group because these settings are typically only required to be accessed and modified during initial set-up and/or during troubleshooting.


*© ARPAC, A Duravant Company*

### 4.5.5. The Production Data Menu Group

The Product Data menu group has two screens; Production Data and Production Data Settings. product count per shift with a running total. Access level 3 or above is required to clear production data.

#### Production Data

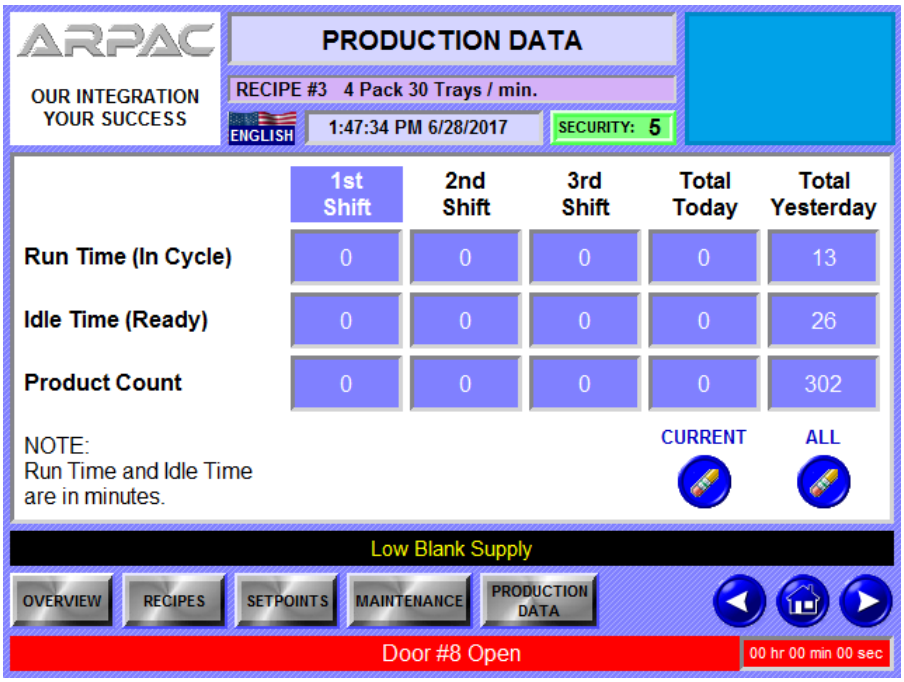


*Figure 4-11 - Production Data Screen*

- Data values related to the number of loads wrapped are displayed here.
- Two different reset buttons allow for resetting the production data for the current shift only or all the data collected since the last reset occurred.

A warning message that has to be acknowledged will appear before the data can be reset.

## *Production Data Settings*

The second screen related to production data allows an operator or supervisor to change the shift times

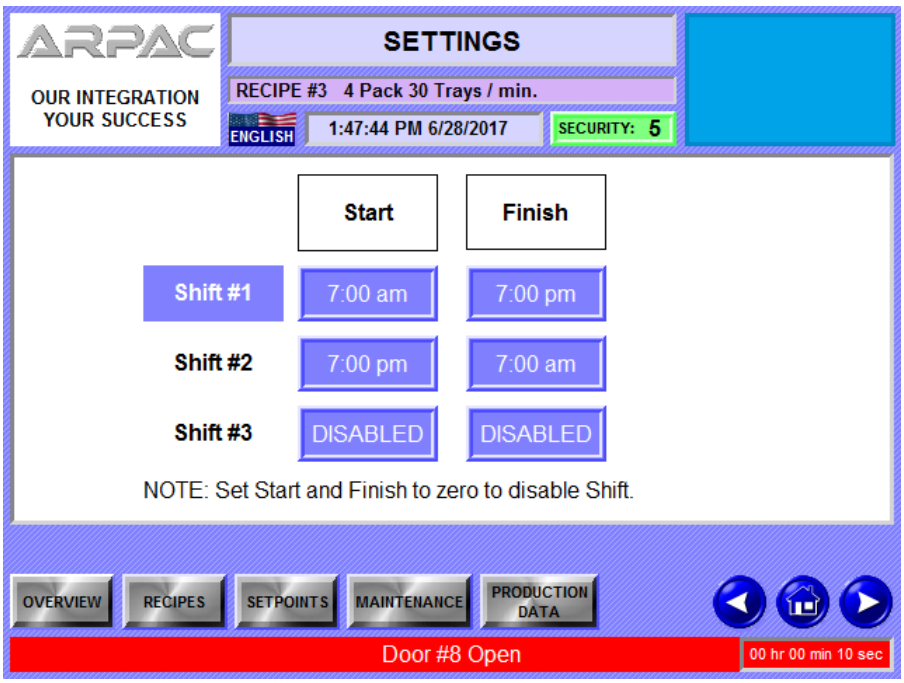


*Figure 4-12 - Production Data Settings Screen*

- Press inside any of the boxes for **Start** or **Finish** to change the setting. The numeric key pad will pop-up. Enter the new value and press the ENTER key.


*© ARPAC, A Duravant Company*

## 4.6. Using the HMI

The following describes how to use the HMI.

### 4.6.1. Logging In

The HMI, when first powered on, boots up on security level 0. Security level 0 allows an operator to view the machine status and to start and stop the machine. Accessing screens requires an operator to be logged.

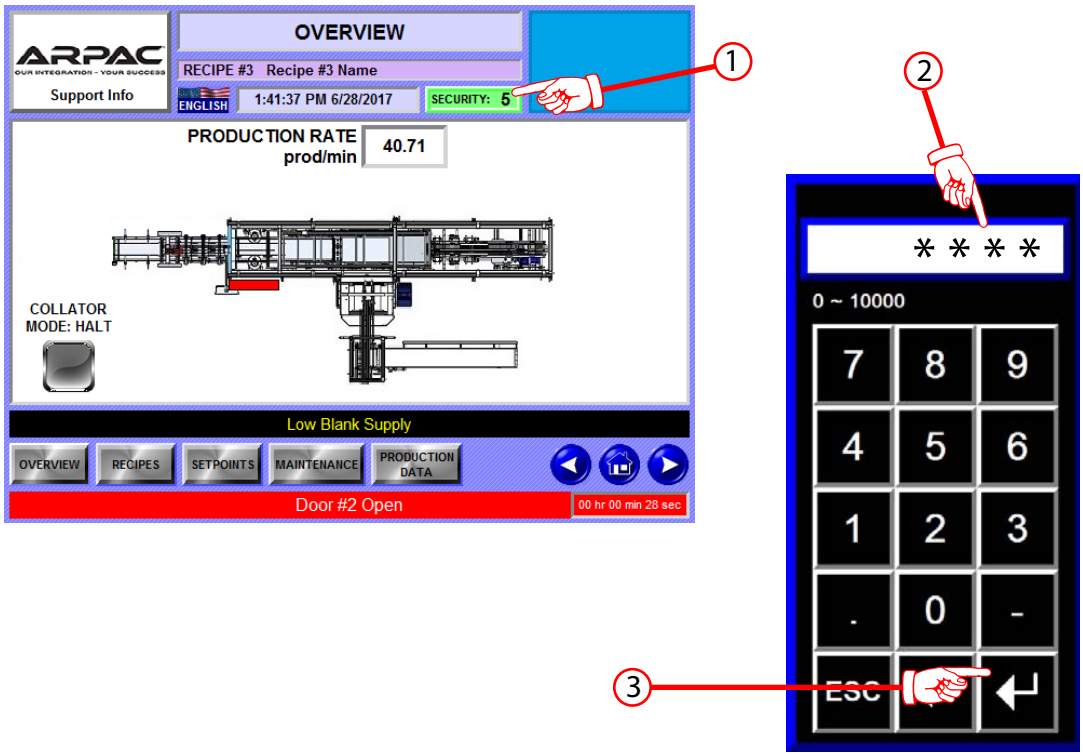


1. Log in by pressing the green LEVEL button.
2. The numeric key pad will open. Enter the 4 digit password for that required level.
3. Press the ENTER key.

| NOTICE |
| --- |
| **Passwords can be obtained by your company's authorized personnel or by calling Arpac's Technical Service department.** |

### 4.6.2. Loading & Copying Recipes

This machine has the ability to store multiple different recipes. Recipes contain the set point values for various machine functions. Each recipe is identified by a number and name. Security level 1 or higher is required to load a recipe.

#### *Loading an Existing Recipe*

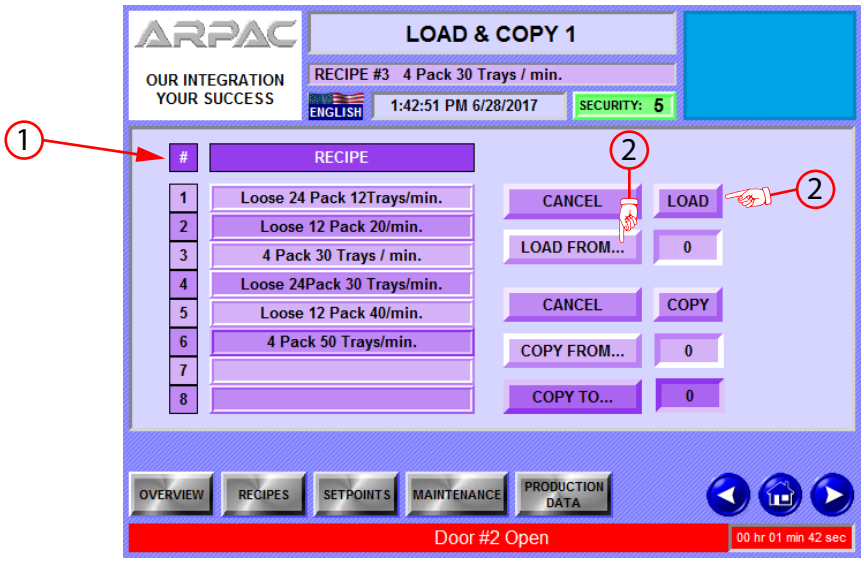


*Figure 4-13 - Recipe Load & Copy 1 screen*

When you wish to load a recipe, you must make sure the machine is out of cycle.

1. Identify the assigned # of the Recipe you want to load.
2. Press the LOAD FROM to open the numeric keypad. Enter the recipe number you wish to use.
3. Press LOAD to upload. Click YES to load the recipe or NO to abort the operation.

| NOTICE |
|---|
| **A warning pop-up will appear letting you know you are about to overwrite the current recipe settings.** |


© ARPAC, A Duravant Company

### Using the Copy Recipe feature to Create a New Recipe

Copying a recipe overwrites the data stored in one recipe and replaces it with the data from another recipe.

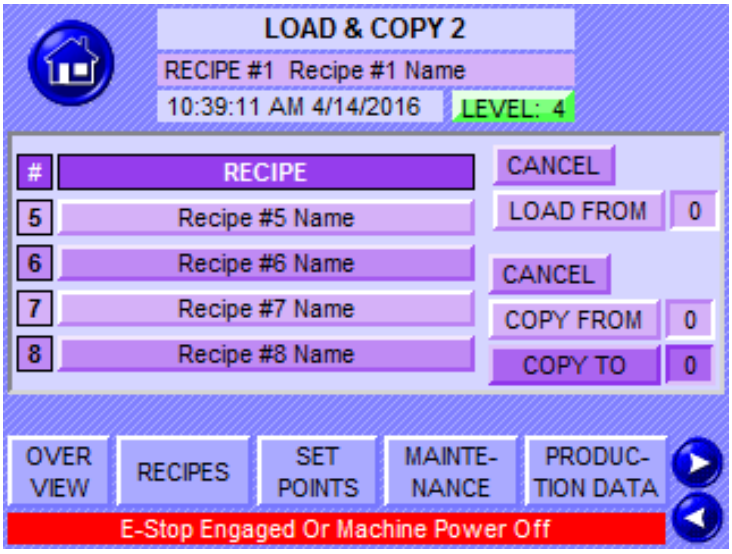


1. Press COPY FROM to open the numeric keypad and enter the recipe number from which you wish to copy set points.

NOTE

The recipe you are copying information from remains unaffected by this operation.

2. Press COPY TO to enter recipe number that you wish to copy the setpoints to for use.
3. Press CANCEL to abort the operation without copying any data.
4. Press COPY to copy the recipe.
5. A warning pop-up will appear letting you know you are about to overwrite the contents.

Press YES to copy the recipe data or NO to abort the operation.

### *4.6.3. Changing Values*

To change a value, navigate to that screen.

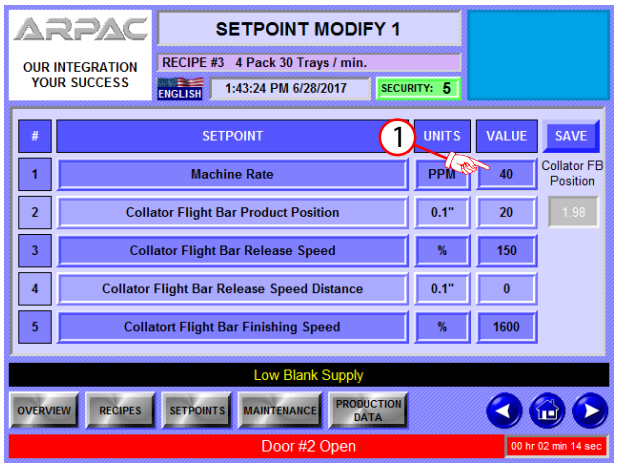


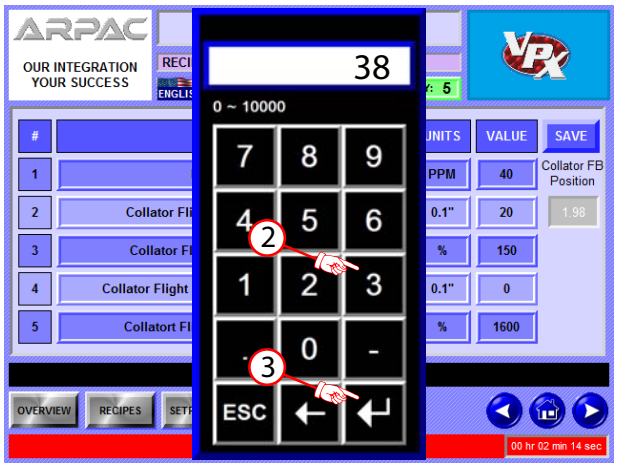


1. Press the box containing the set point value. The pop-up keypad will appear.
2. Enter the new value.
3. Press the ENTER key to accept the new value.


*© ARPAC, A Duravant Company*

# 5

# Operating Procedures

## 5.1. Applying Power

Power is applied to the equipment at the Main Electrical Cabinet

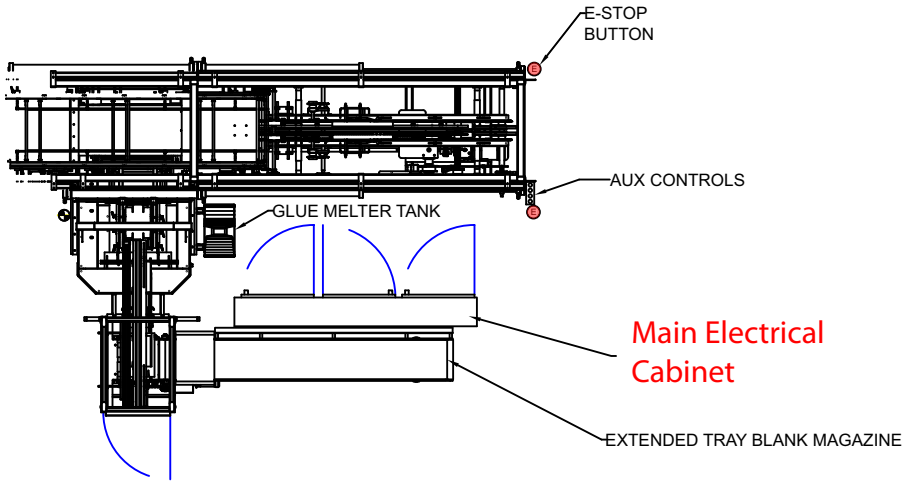

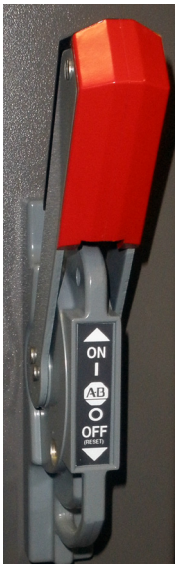


*Figure 5-1 - Main Disconnect Switch*

1. Make sure the machine is connected to its power source.
2. Notify all involved that power is being applied.
3. Flip the Main Disconnect to the ON position.
4. Press the POWER ON push button @ the Main Control Cabinet.


*© ARPAC, a Duravant Company*

## 5.2. Loading Consumables

### 5.2.1. Loading Blanks

1. Inspect the blanks to be loaded and discard any that are damaged. Examples of damaged blanks are the following: blanks that are coming apart, that have water damage, that are warped, that are torn or have crease marks from banding straps.
2. 2. Orient the blanks as they will be run. Make sure that the score line side is up. Some stacks may have blanks upside down. Always watch for these and position them properly or the blanks will jam.
3. Load the blank magazine. Do not allow the height of the blank stack to exceed the height of the side guides.
4. Load the blanks stacks onto the conveyor as shown. Make sure that the stacks are square and oriented in the correct direction. Also, the stacks should be at least 6” away from adjacent stacks.

## *5.3.* Startup and Shutdown Procedures

### *5.3.1. Pre-Start Inspection*

Before starting the machine, check for the following:

5. 1. Make sure the machine and the area around the machine is clear of items not directly related to the normal operation of the machine.

6. Check the pneumatic lubricator and regulator. Fill or empty, accordingly.

7. 3. Inspect the tunnel's insides and belt, for film and any other debris.

8. 4. Make sure that all persons in the area of the machine are aware the machine is about to start.

### *5.3.2. Apply Power*

1. Place the **Main Power Disconnect** switch to the ON position.
2. Open the **Master Air Supply Regulator** valve. Verify the air regulator gauge is at least 80 psi.
3. Pull out all **Emergency Stop** push-pull buttons.

NOTE

If this is the first time the machine has been turned on in your plant, be sure to check the tunnel conveyor belt and blower motors for the proper rotation. If either are going in the reverse direction, then **STOP!!!** Shut off the machine immediately. Running the machine in reverse could damage the machine.

4. 5. Press the **Power On** push button. This will turn on the Seal Bar heating elements, the Tunnel heater elements and the main drive motor.


*© ARPAC, a Duravant Company*

## *5.4.* Putting the TrayStar™ Into Cycle

WARNING

**Make sure all personnel are clear from machine before putting the machine in cycle. Press the EMERGENCY STOP button to stop the machine if a hazard appears to personnel or the machine.**

NOTE

Power has to be applied and all faults must be cleared before the mahcine can be put into cycle.

1. Make sure consumables have been loaded.
2. Make sure that proper recipe for the product has been selected.
3. Press the **CYCLE STOP/RESET** button.
4. Press the **CYCLE START** button.

## *5.5.* Stopping the TrayStar™

### *5.5.1. Performing an Emergency Stop*

In case of an emergency, press any one of the Emergency Stop push buttons to stop the machine immediately.

#### *Recovering from an Emergency Stop*

After pressing the **EMERGENCY STOP** button, do the following to reset the machine:

1. Remove all product from machine.
2. Remove or resolve the cause of the emergency stop action.
3. Pull all the **EMERGENCY STOP** buttons out.
4. Press the **POWER ON** button.
5. Press the **CYCLE STOP/RESET** button.
6. Press the **CYCLE START** button.

### *5.5.2. Stopping Under Normal Conditions*

The best way to stop the machine, under normal conditions, is to press the CYCLE STOP / RESET push button. This allows the machine to come to a controlled stop.

| NOTICE |
| --- |
| **Opening a guard door will also stop the machine, but this method isn't a controlled stop and removal of some product will be necessary, increasing the amount of time the machine will be out of cycle.** |


*© ARPAC, a Duravant Company*

## 5.6. Clearing Jams/ Recovering from a Fault

A complete list of faults, possible causes and corrective actions is included in the Troubleshooting chapter. This section explains how to identify the fault and procedures for restarting.

### 5.6.1. Identifying the Fault

When a fault occurs, a red banner will appear at the bottom of the HMI screen indicating what the fault is.

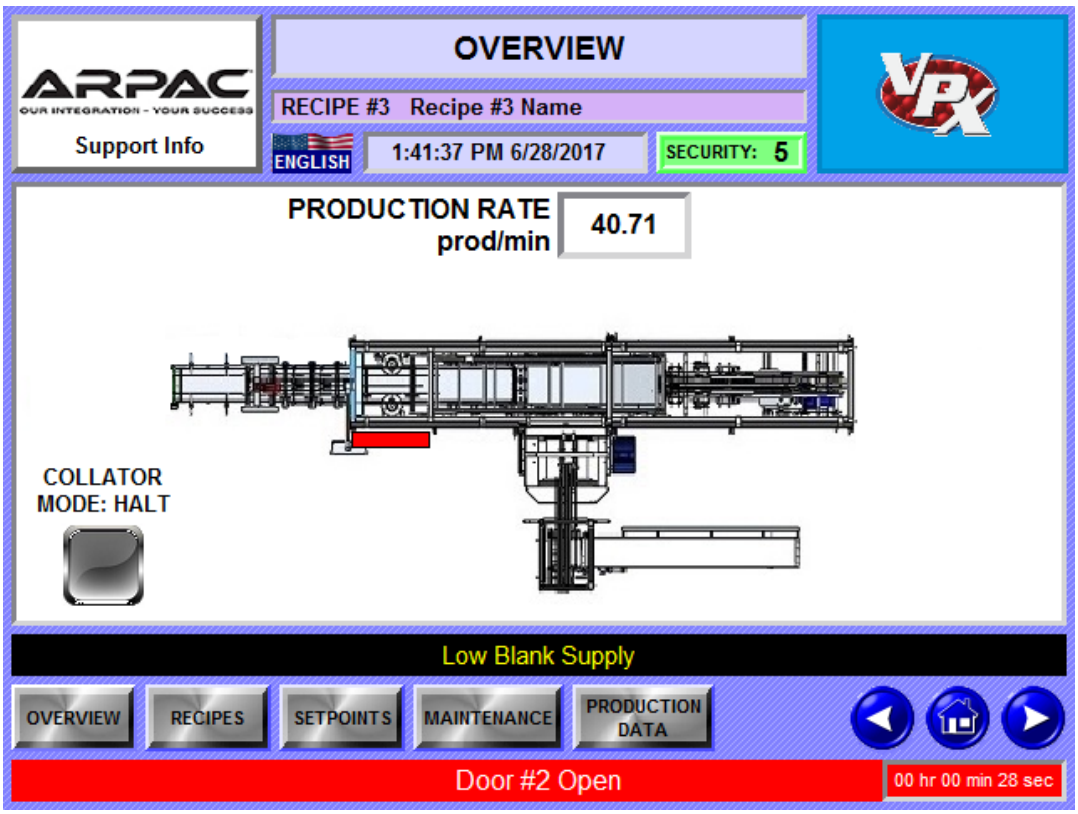


### 5.6.2. Address the Cause

1. Remove product, if necessary
2. Reset any torque limiters, if necessary
3. Prep the machine for a restart by adding or removing product, if necessary.
4. Close the guard door.
5. Press the ***CYCLE STOP / RESET*** button.
6. Press the ***CYCLE START*** button when ready.

## 5.7. Shutting Down

### 5.7.1. Short Term Shut Down

To stop the machine for a short period of time (lunch break, product changeover, etc), press the ***CYCLE STOP / RESET*** button.

### 5.7.2. Long Term Shut Down

To completely shut down the machine for an extended period of time (maintenance, end of production for the day):

1. Press the ***CYCLE STOP / RESET*** button.
2. Clear out any product from the machine.
3. Press an ***EMERGENCY STOP*** push button.
4. From the Main Electrical Cabinet, turn the ***Main Disconnect Switch*** to the OFF position.


© ARPAC, a Duravant Company

## *5.8.* Resetting Torque Limiters

Chain driven assemblies come equipped with a torque limiter that trips and disengages the assembly due to excessive force caused by a jam.

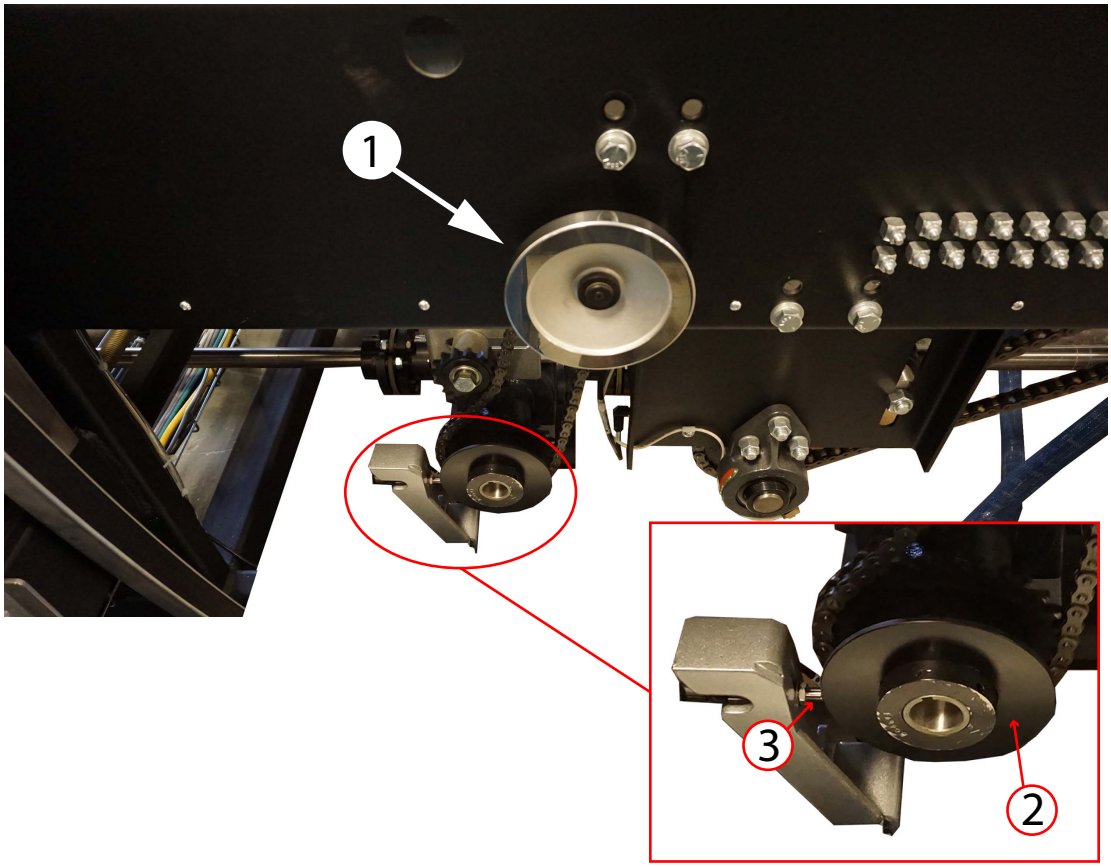


All torque limiters, like the *Flap Tucker* torque limiter (2) shown here, have a spring loaded plate that energizes a prox switch (3) when tripped. A corresponding input is sent to the PLC to stop the machine and display a fault message.

- With the machine cycle stopped, use the provided hand wheel (1) to reengage the torque limiter.
- Press a **CYCLE STOP / RESET** button to clear the fault.

© ARPAC, a Duravant Company

# 6

# Troubleshooting

## 6.1. Overview

This chapter includes troubleshooting information, divided into two sections to guide you through getting the machine up and running with minimal downtime.

The first section is a table of fault messages that appear on the HMI. Below that is a list of remedies.

The second section is a complied list of possible abnormal running conditions and their remedies.

| WARNING |
| --- |
| **Do not attempt to service equipment that is in cycle. Serious injury or death may occur. Properly stop the equipment when addressing faults. Refer to you specific plant safety protocols required for opening guard doors to clear jams and faults.**<br>**Perform LOTO before performing maintenance.** |

## *6.2.* Faults Messages

| Message | Possible Cause | Remedy |
|---|---|---|
| **Trayloader Low Air Pressure** | Air supply is not connected to machine or is OFF. | Make sure that air line is connected and ON. |
| | Shut-off Valve is closed. | Make sure that main air valve is in the SUP position. |
| | Air regulator is not set correctly. | Make sure air regulator is set to 80 PSI. |
| | Air filter is clogged. | Replace air filter according to Section |
| | Main air solenoid valve is faulty. | Check operation of main air solenoid valve. There is a red LED indicator on the valve that will light up when the valve is activated provided that the valve and it's support circuits are working properly |
| | Air pressure switch faulty. | Check operation of pressure switch. |
| **Glue Unit Not Ready** | The glue hoses, guns and/or tank are not at setpoint temperature. | Wait for temperature to reach setpoint temperature. Refer to glue units instruction manual for more details. |


© ARPAC, A Duravant Company

| Message | Possible Cause | Remedy |
|---|---|---|
| **Detect Blank Missed On Blank Feed Conveyor.** | Blank not picked and fed.<br>“Detect blank in position” photo eye problems. | Check cups for clogs and cleanliness<br>Check mounting and function of photo eye. |
| | Damaged or warped corrugated blank. | Remove blank. Inspect blanks in magazine for similar conditions. |
| **Blank Jammed at Blank Feed Conveyor** | Blank Feed Torque Limiter tripped. | Clear jam. Reset torque limiter. |
| **Fallen Product - Trayloader Flight Bar Area** | Product has fallen in pacing flight area. | Remove product. Check for any obstructions in area. |
| **Blank Feed Conveyor Torque Limiter Tripped** | Lugged conveyor is jammed by an obstruction. | Correct jam condition.<br>To reset torque limiter, locate associated handwheel or ratchet point and turn until torque limiter engages. |
| | Torque limiter not set properly. | If torque limiter disengages under normal or starting load conditions, verify torque setting on limiter. Adjust as needed. |
| | Torque limiter proximity sensor problems. | Inspect wiring and position of sensor. Adjust or repair as needed. |
| **Trayloader Flight Bar Torque Limiter Tripped** | *See: Blank Feed Conveyor Torque Limiter Tripped* | *See: Blank Feed Conveyor Torque Limiter Tripped* |

| Message | Possible Cause | Remedy |
|---|---|---|
| **Flap Tucker Torque Limiter Tripped** | *See: Blank Feed Conveyor Torque Limiter Tripped* | *See: Blank Feed Conveyor Torque Limiter Tripped* |
| **Trayloader Flight Bar Torque Limiter Tripped** | *See: Blank Feed Conveyor Torque Limiter Tripped* | *See: Blank Feed Conveyor Torque Limiter Tripped* |
| **Blank Pusher Torque Limiter Tripped** | *See: Blank Feed Conveyor Torque Limiter Tripped* | *See: Blank Feed Conveyor Torque Limiter Tripped* |
| **Tray Former Torque Limiter Tripped** | *See: Blank Feed Conveyor Torque Limiter Tripped* | *See: Blank Feed Conveyor Torque Limiter Tripped* |
| **Product Release Gate Jammed** | Collator Clamp did not get back to the full down position. | Check for and remove any obstruction. |
| **Main Drive Fault** | Drive controller fault. | Shut down the machine for a minimum of 1 minute and restart the machine.<br><br>Refer to the controller manual on CD for more details. |
| **Collator Servo's Not Ready** | Drive controller fault. | Shut down the machine for a minimum of 1 minute and restart the machine.<br><br>Refer to the controller manual on CD for more details. |
| **Flap Closer Torque Limiter Tripped** | *See: Blank Feed Conveyor Torque Limiter Tripped* | *See: Blank Feed Conveyor Torque Limiter Tripped* |
| **Collator Must Be Homed** | Servo motor has lost track of its position. | Press HOME button on HMI *Machine Controls* screen. |


*© ARPAC, A Duravant Company*

| Message | Possible Cause | Remedy |
|---|---|---|
| **Collator Jammed** | Escapement Flight Bar Clear PE blocked as product is being released | Check for and remove any obstruction. |
| **Reset Door Safety Relay** | A guard door was opened, then closed and the ***CYCLE STOP / RESET*** button was not pressed. | The guard door safety relay circuit can detect when a door is open and when one is closed. In this situation, the LED on the switch will be flashing green |
| **Blank Roller Drive Fault** | Drive controller fault. | Shut down the machine for a minimum of 1 minute and restart the machine.<br><br>Refer to the controller manual on CD for more details. |
| **Open Flap Detected** | *See: Blank Feed Conveyor Torque Limiter Tripped* | *See: Blank Feed Conveyor Torque Limiter Tripped* |
| **Main Drive Ratchet Missing** | Prox Switch to detect presence of ratchet not made | Replace missing ratchet |
| | | Check for faulty prox sensor |
| | | Check position of prox sensor |
| **Door "#" Open** | Canopy door is open. | Close door. Press ***CYCLE STOP / RESET*** button |
| **Blank Magazine Door "#" Open** | Guard door on Extended Blank Magazine is openis open. | Close door. Press ***CYCLE STOP / RESET*** button |

| Message | Possible Cause | Remedy |
|---|---|---|
| **E-STOP "#" Pressed** | Emergency Stop button pressed at location cited. | Make sure all Emergency Stop buttons are pulled up.<br><br>Press ***CYCLE STOP/ RESET*** button to clear message |
| **Line E-Stop Engaged** | Emergency Stop button on the equipment interconnected to the TrayStar pressed | Make sure all Emergency Stop buttons are pulled up.<br><br>Press ***CYCLE STOP/ RESET*** button to clear message |
| **Blank Loader Bridge is Not in the Down Position** | Prox Switch to detect down position not made | Replace missing ratchet |
| | | Check for faulty prox sensor |
| | | Check position of prox sensor |
| **Blank Lifter Jammed** | The Blank Lift assembly left the DOWN prox and did not make the UP prox in time or did not make it back to the DOWN prox in time | Check for an obstruction |
| | | Check position of prox sensor |
| | | Check for an obstruction |
| **Blank Loader Jammed** | The Blank Loader assembly left the HOME prox and did not make the FORWARD prox in time | Check for an obstruction |
| | | Check position of prox sensor |
| | | Check for an obstruction |


*© ARPAC, A Duravant Company*

| Message | Possible Cause | Remedy |
|---|---|---|
| **Blank Magazine Conveyor Drive Fault** | Drive controller fault. | Shut down the machine for a minimum of 1 minute and restart the machine.<br><br>Refer to the controller manual on CD for more details. |
| **Escapement Servo Faulted** | Drive controller fault. | Shut down the machine for a minimum of 1 minute and restart the machine.<br><br>Refer to the controller manual on CD for more details. |
| **Home Escapement Servo** | Servo motor has lost track of its position. | Press HOME button on HMI *Machine Controls* screen. |
| **Escapement Flight Bar Blocked** | Escapement Flight Bar Clear PE blocked when Escapement FB's started to move | Remove product, Home servo and press ***CYCLE STOP/ RESET*** button to clear message and reset the machine |

## *6.3.* Abnormal Running Conditions

This section was designed to help the operator and the maintenance personnel understand and resolve abnormalities with the machine.

This section was designed to help the operator and the maintenance personnel understand and resolve any possible abnormalities with the

machine. Abnormal running conditions and operator interface error messages are covered.

Use the following troubleshooting index and troubleshooting charts as an aid in solving your machine's malfunction.

| Problem | Possible Cause | Remedy |
|---|---|---|
| **Product Jams at Infeed Conveyor** | Insufficient back pressure. | Increase speed of upstream conveyor. |
| | Infeed side guides too loose/tight | Set up the product triangle pattern and check for the proper clearance. |
| **Product Jams at Collator** | The collator is not set up for the proper width and/or length. | Reset the width of the collator using the operator interface. |
| **Product Escapes From Collator Lugs** | The collator is not set to the proper width. | Check the pack pattern and adjust the width accordingly. |
| | The prodcuts have loose labels. | Correct the problem at labeler. |
| | The center guide is not square with the collator. | If not, reposition the center guide. |
| | Is the center support guide mounting tight? | Check center support nut for tightness. |
| **Pacing Flight Bar Problems** | The flight bar infeed guides are not set properly for the product size being run through the machine. | Recheck the guides and if wrong, readjust. |
| | The flight bar conveyor is not set up properly. | Verify that the machine is set to mechanical zero. |


*© ARPAC, A Duravant Company*

| Problem | Possible Cause | Remedy |
|---|---|---|
| **Blank Feed Problems** | The clearance is not set properly on the blank magazine. | When properly set, the tray should have a maximum 1/16-inch side and end clearance. |
| **Blank Feed Problems (Cont.)** | The support pins are not set properly on the blank magazine. | Check the pins on each side. Center pints should be equal and protrude further than additional pins, which should be set for minimal engagement. Take care not to pre-break minor flaps. |
| | The rear “T” support on the blank magazine is not in the correct position. | The centerline of the front rod of the “T” support should be positioned at the tray edge. |
| **Blank Ejector Problems** | Incorrect program setup. | Recheck the Electro Cam program number and settings for the proper channel.<br><br>Verify program number and product size. |
| | The blank ejector lugs are not set to the correct position. | Reset the position of the blank ejector lugs. |
| | Incorrect air pressure. | Check airflow adjustment (solenoid/cylinder).<br>Check for air leakage. |

| Problem | Possible Cause | Remedy |
|---|---|---|
| **Blank Conveyor Jams** | Loose, broken or worn drive timing belts. | Check and replace worn parts. |
| | Bad tray blanks. | The trays should be clean, flat and dry. The trays should not be bowed or warped more than 1/4 inch/linear foot.<br><br>Check to see if the tray blank is in the wrong direction. |
| | Wrong size tray blank. | Measure the trays to see if they are correct. |
| | Parts and/or a damaged tray blank blocking discharge path. | Check the tray blank lower path is clear of debris. |
| | Bad or worn bearings. | Check and replace worn parts. |
| | Loose, broken or worn drive timing belts. | |
| | Blank feed conveyor torque limiter is out of adjustment. | Adjust lubrication schedule. Check for proper alignment.<br><br>Check that the torque limiter is in proper adjustment |
| | Blank feed conveyor synchronizer faulty or out of adjustment. | Check tightness and/or replace belts.<br><br>Check for proper roller chain adjustment. |


*© ARPAC, A Duravant Company*

| Problem | Possible Cause | Remedy |
|---|---|---|
| **Blank Pull-Down Problems** | Blanks are upside-down. | Inspect the blanks in the magazine. Reposition as necessary. |
| | Incorrect vacuum pressure. | Inspect blow off sensor for proper operation. Adjust or replace, as necessary. |
| | Defective blow off sensor. | Verify “vacuum blow off” proximity sensor is positioned to release vacuum before blank kicker is actuated. |
| **Blank Pull-Down Problems (cont.)** | Defective vacuum cup. | Inspect vacuum cups for wear. Replace cups or adjust sensor as necessary. |
| | Improper vacuum cup adjustment. | Inspect the vacuum cup’s position. In the upper position, the cup should barely touch the bottom of the case in the hopper.<br><br>Verify vacuum cups are NOT aligned to a blank’s score line and adjust individual cups or entire assembly as needed. |

| Problem | Possible Cause | Remedy |
|---|---|---|
| **Flap Closure Problems** | Flap closure torque limiter not reset. | Check that the torque limiter is in proper adjustment. |
| | Flap closure out of adjustment. | Flap tucker must engage, tuck and remain engaged until retained by guides allowing a 1/4-inch clearance from tucker to tray on each side. |
| | Tray/product not centered. | Center tray and or the product. |
| | Flap closure parts loose, worn or broken | Inspect and replace worn or broken parts. |
| | No or low glue supply. | Check; if low, fill the glue unit. |
| **Glue Guns Not Operating** | Low air supply to the glue unit. | Adjust incoming pressure to 80 psi. |
| | Low supply of glue. | Inspect glue supply and add glue, if needed. |
| | Low glue temperature. | Inspect the temperature of the glue and adjust, if needed. Make sure to stop production until the glue temperature is correct. |
| | Dirty, defective or misaligned glue photo eye. | Inspect the photo eye sensor and wiring. Clean or replace as needed. |
| | Glue gun/nozzle damaged or clogged. | Clean/replace component. |
| | Main glue unit not set up properly for the application. | Check glue supplier for correct set up procedure. |


*© ARPAC, A Duravant Company*

| Problem | Possible Cause | Remedy |
|---|---|---|
| **Trays Not Sealing** | Glue gun disconnected. | Check for a broken or disconnected air line to the glue gun; if damaged, replace it. |
| | Low air supply to the glue unit. | Adjust incoming air pressure to 80 PSI. |
| | Glue gun damaged. | If damaged, replace glue gun |
| | Clogged nozzle. | Unclog the nozzle. |
| | Bad or wrong glue Faulty glue photo sensor. | If the wrong glue type was accidentally added to the glue unit, serious problems could result. Check with the glue manufacture for glue compatibility and follow their directions. |
| | Damaged or disconnected hoses. | Check for damage and repair. |
| | Glue guns not properly set up, programmed or adjusted. | If the problem still persists, re-read and follow the Electro cam glue setup procedures. Check glue suppliers. Verify program number and product size. |

| Problem | Possible Cause | Remedy |
|---|---|---|
| **Trays Not Sealing (Cont.)** | Main glue unit not properly setup for the application. | Re-read and follow directions on the setup of the tray-forming conveyor. |
| | Wrong tray or product size. | |
| | Flap closure side rails too high or too low. | |
| | Compression side rails not properly adjusted. | |
| | Wrong program | Verify program number and product size. |
| | Side compression and lug compression not properly adjusted for the required tray size. | |


*© ARPAC, A Duravant Company*

# 7

# Maintenance

## 7.1. Preventive Maintenance Schedule

Refer to the schedule below for information on when to perform periodic maintenance on the machine.

NOTE

Due to varying operating conditions, the procedures listed below may have to be performed at greater or lesser intervals. You may have to adjust intervals according to your machine's performance

WARNING

**The following procedures should only be done after the machine has been turned off, allowed to cool down and the air pressure has been released. Always follow Lockout/Tagout procedures. Always wear safety glasses and all required personal protective equipment.**

| | When To Do It | | | |
|---|---|---|---|---|
| **Task** | **Daily** | **Weekly** | **Quarterly** | **Every 6 Months** |
| **Perform Walk Around Safety Inspection** | X | | | |
| **Clean External Surfaces** | X | | | |
| **Check EMERGENCY STOP Button For Proper Operation** | X | | | |
| **Inspect Vacuum Cup Filters** | X | | | |
| **Clean Photo Eyes** | | X | | |
| **Inspect Glue Gun Nozzles & Hoses** | | X | | |
| **Inspect Conveyor Belts** | | | X | |
| **Lubricate Drive Chains** | | | X | |
| **Inspect Chain Tensions** | | | X | |
| **Check Fastners** | | | | X |
| **Grease Zerk Fittings** | | | | X |
| **Inspect Gearbox Seals** | | | | X |

*Table 7-1 - Periodic Maintenance Schedule*


*© ARPAC, A Duravant Company*

## 7.2. Daily Tasks

### 7.2.1. Walk Around Safety Inspection

WARNING

**Before continuing with any maintenance checks, shut off power supply to machine. You can be severely injured if you do not.**

At the beginning of each day, do a daily safety inspection of the machine and its surrounding area. Pick up any trash or obstacles around the machine. Wipe up any grease or spills.

Commodities like rolls of film should be placed conveniently, yet out of the way so an operator can move around safely.

The areas in red represent areas around the machine that should be kept clear so an operator can safely operate the equipment.

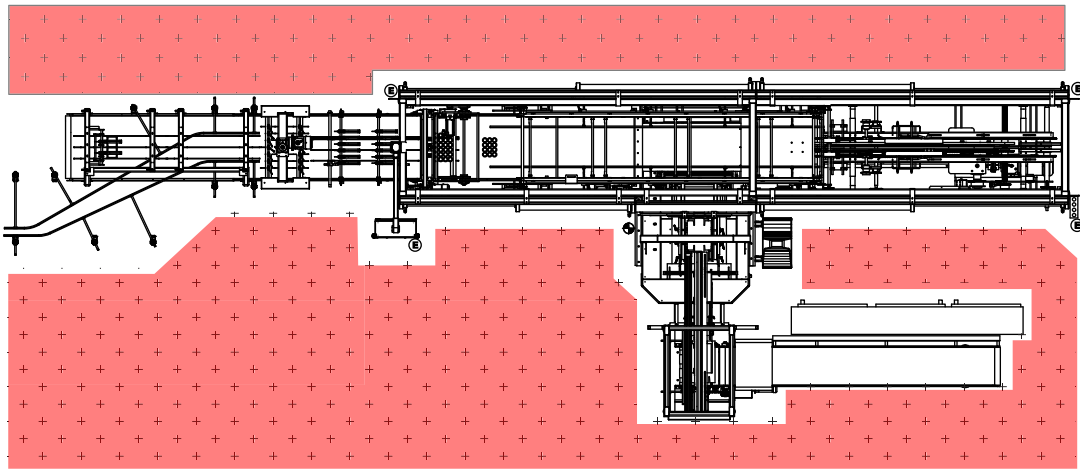

*Figure 7-1 - Walk around inspection*

### 7.2.2. Cleaning External Surfaces

**Required Tools**

You need the following special tools for this procedure:

- cleaning wipes or a soft, damp cloth

**Warning**

**Turn off machine's main disconnect switch before servicing machine. You can get severely injured if you do not.**

1. Use cleaning wipes to clean external surfaces of the machine.

### 7.2.3. Check Emergency Stop Button

Verify functionality of all Emergency Stop push buttons. With the machine cycling, press the **EMERGENCY STOP** button. The machine should stop immediately. Pull button back up and press RESET button to reset.

*Figure 7-2 - Emergency Stop Push Button*


© ARPAC, A Duravant Company

### 7.2.4. Inspect Vacuum Cup Filters

Inspect the vacuum cups for corrugate dust. Use an air nozzle with low pressure to blow away debris.

## 7.3. Weekly Tasks

### 7.3.1. Cleaning Photo Eye

To clean the photo eye spray a small amount of window cleaner on it and wipe it clean with a cleaning wipe.

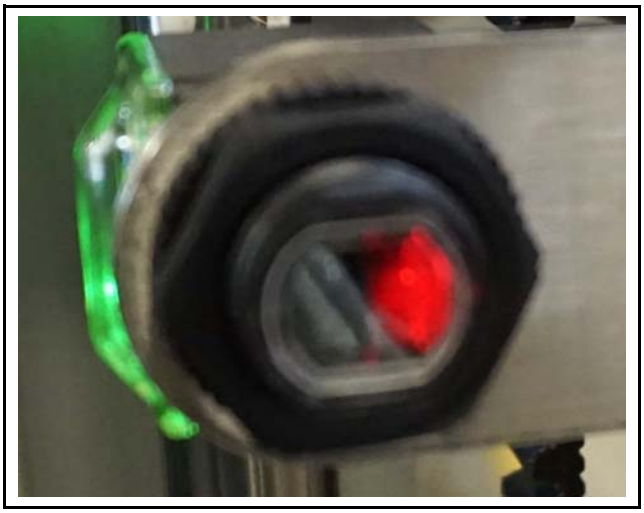

*Figure 7-3 - Photo Eye Lens*

### 7.3.2. Inspect Glue Guns & Hoses

The type of glue system depends on the application, but the principal is the same regardless. Inspect and clean as necessary all glue system components; nozzles, glue gun, hoses and connections.

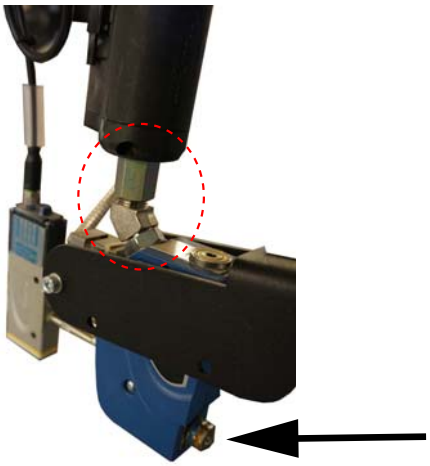


© ARPAC, A Duravant Company

## 7.4. Quarterly

### 7.4.1. Inspect & Clean Conveyor Belts

Inspect the plastic modular belting for any loose pins at the edges of the belt (1) or damaged links (2). Using cleaning wipes or a soft damp cloth, wipe remove any built up debris.

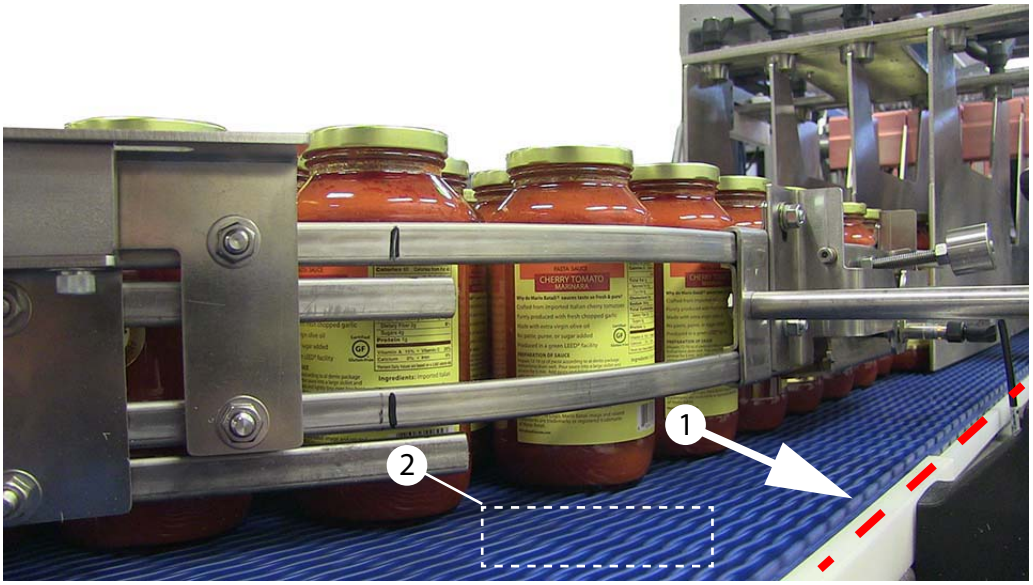


*Figure 7-4 - Inspect Modular Belts*

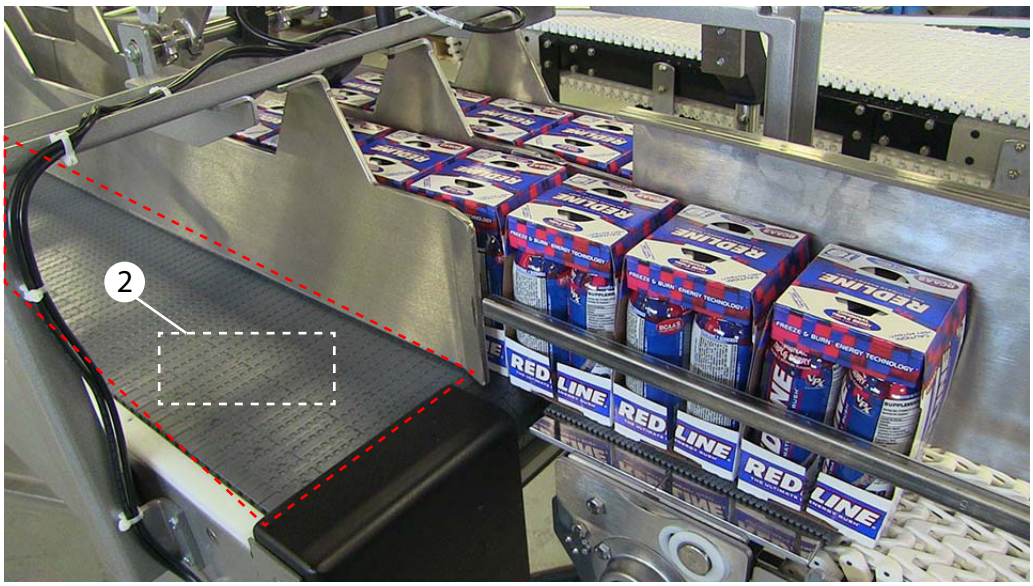


*Figure 7-5 - Inspect Table Top In-feed Conveyor Belt*

### 7.4.2. Clean & Lubricate Drive Chains

**Required Tools**

You need the following special tools for this procedure:

- cleaning wipes
- Light weight chain lubricant
- Applicator

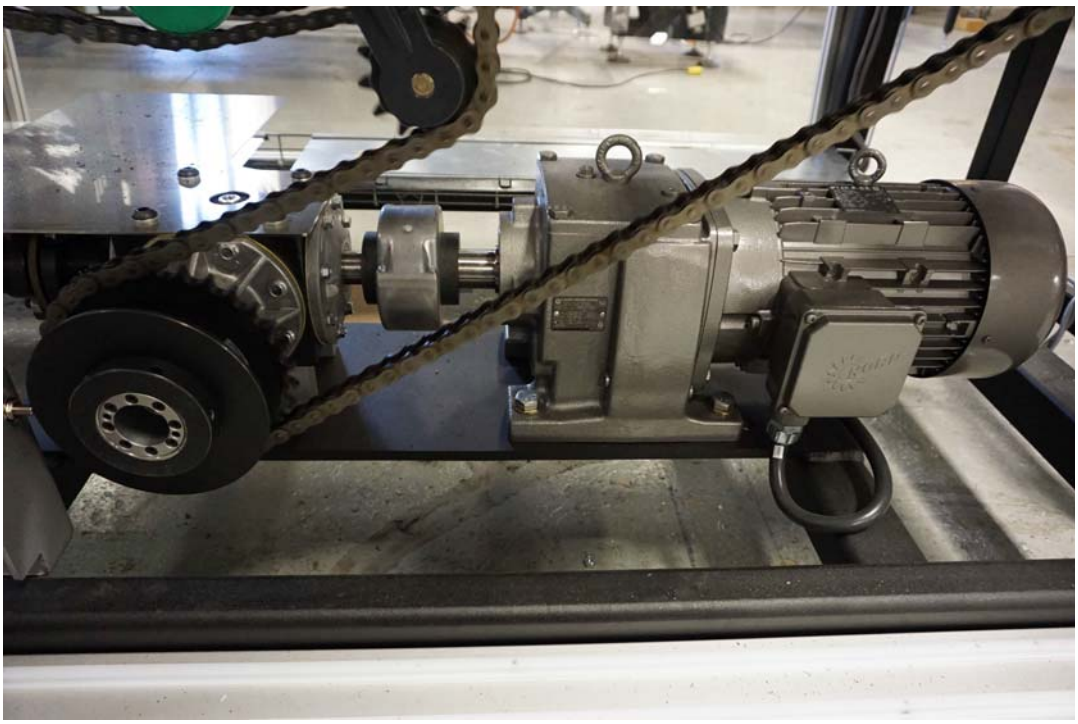


© ARPAC, A Duravant Company

### 7.4.3. Inspect Compression Chain Tension

Each of the Leading and Trailing Compression chains comes with a chain tensioner. Adjust as necessary.

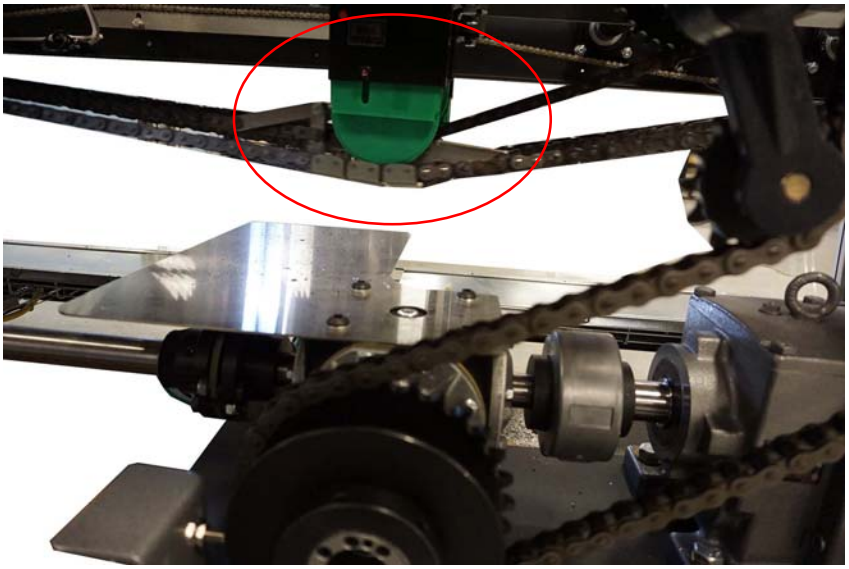

## 7.5. B-Annual

### 7.5.1. Checking Fasteners for Tightness

**Required Tools**

You need the following special tools for this procedure:

- Adjustable End Wrench
- Medium Flat Tip Screwdriver
- Medium Phillips Tip Screwdriver
- Set of Hex Wrenches

Check/tighten all exterior fasteners.

### 7.5.2. Inspect Gearbox Seals

The gearbox types used on this equipment are referred to as: “SEALED”, meaning; according to the OEM, the gearboxes are sealed and do not require additional lubrication, but the seals at the motor/gearbox union should be inspected twice a year for leaks.


© ARPAC, A Duravant Company

## 7.6. Chain & Bearing Maintenance

### 7.6.1. Chain Lubrication & Care

Proper lubrication is critical in achieving the maximum wear life of any roller chain. As the chain articulates around the sprockets, the pin and bushing wear. This wearing causes the elongation, or “stretch”, in the chain. Lubrication of these surfaces through proper lube application can greatly increase the wear life of the chain.

#### Recommended Lubricants

Ambient temperature: 20-40 F - SUS Viscosity 100 F of 200-400, SAE Engine oil of 20 Weight, SAE Gear Oil 80 W, ISO 46 or 68, and AGMA lubrication 1 or 2.

Ambient temperature: 40-100 F - SUS Viscosity 400-650, SAE Engine oil of 30 Weight, SAE Gear Oil 85 W, ISO 100, and AGMA lubrication 3.

Ambient Temperature 100-120 F - SUS Viscosity 650-950, SAE Engine oil of 40 Weight, SAE Gear Oil 90, ISO 150, and AGMA lubrication 4.

Ambient Temperature 120-140 F - SUS Viscosity 950-1450, SAE Engine oil of 50 Weight, SAE Gear Oil 90, ISO 220, and AGMA lubrication 5.

### 7.6.2. Bearing Lubrication & Care

#### Food Grade

LUBRIPLATE SFL-2 is a **synthetic multi-purpose food-grade grease**, which can be used throughout most modern food processing plants for most all grease lubrication requirements. This product has an approximate operating temperature range of -25 to 400°F. (white in color).

#### Non-Food Grade

MULTIPLEX RED #2 **lithium complex grease** developed for the lubrication of automotive and industrial equipment operating under heavy loads and at moderate to high temperatures. It is particularly recommended for use in applications that are too severe or require higher performance than provided by conventional extreme-pressure lithium greases.

These are just brands, there are many other comparable brands which can be used on industrial equipment use in secondary packaging.

They only need to be comparable in temperature range, viscosity, and application (food grade or not).

© ARPAC, A Duravant Company

# 8

# Service/Support Information

## 8.1. Service Information Introduction

This section contains an overview of ARPAC®'s field service policies. ARPAC aims to deliver the highest level of service with the assistance of the aftermarket department, SupportPro™.

## 8.2. Objective

To furnish our customer with prompt, competent, and complete service so they can operate at optimum efficiency.

SupportPro is a one-stop, nation aftermarket solution, representing strategic secondary packaging equipment partners. Our facilities in Chicago and Syracuse, combined with a nationwide field service network, allow us to provide a complete range of aftermarket services. We offer these in a convenient, cost-effective, and value-added manner for our equipment partners and end-customers across the US.

## 8.3. Service Personnel

Our technical services work to optimize your equipment investment. With their experience in servicing APRPAC equipment, instructing customer's personnel in correct operation and maintenance is a simple task. All field service technicians receive support from the factory and engineering departments.

## 8.4. Training

An ARPAC advantage is free lifetime training for customers purchasing packaging machines from ARPAC or its distributors. Knowledge of machines leads to power, performance, and profitability. SupportPro teaches theory of operation, machine setup and operation, preventive maintenance and long-term care. For further information please contact SupportPro at 844.777.8776.

## *8.5.* ARPAC & SupportPro Commitment

Consistently accessible to communicate with customer(s). Service Technician availability for supervision and instruction of personnel. The goal of the tech is to minimize downtime of your production facilities and commence training of your personnel.

## *8.6.* Tech Scheduling

Please allow 10-days advance notice to schedule a SupportPro technician. Emergency situation are handled as quickly as possible. If assistance is required please contact SupportPro to schedule a technician at 844.777.8776.

## *8.7.* Instillation Policy

All equipment is unloaded, unpacked and inspected for any damage. If there is any damage, the Bill of Landing will need to be signed describing the damage.

Prepare area to install your ARPAC equipment. Assemble your equipment.

Provide qualified technicians, operators, and maintenance personnel to start up system.

## *8.8.* The SupportPro Advantage

Leverage our aftermarket services. Our secure web portal gives you access to all documentation of your machines. Therefore, no need to reorder any lost manuals, schematics, or bill of materials. In addition, the portal user can access pictures and videos of their machine to visually understand the machine. Finally, the portal gives the machine operator secure way to contact SupportPro with any questions or concerns. Details about the web portal will be sent via email after the machine is shipped.


*© ARPAC, A Duravant Company*

# A

# *Illustrated Assembly Drawings & BOM*

## *A.1.* Illustrated Assembly Drawings & BOM

This section contains the bills of materials (BOMs) with mechanical prints. The mechanical print, if available, precedes the corresponding BOM. In some instances, the mechanical print is not available. The BOM, whether a print accompanies it or not, still contains valid descriptions and part numbers for the assemblies.

© ARPAC, A Duravant Company

| REVISIONS | | | |
|---|---|---|---|
| RV | DATE | BY | DESCRIPTION |
| A | 5/10/2021 | SRA | ADDED BRIDGE CONVEYOR TO SIDE TRANSFER |

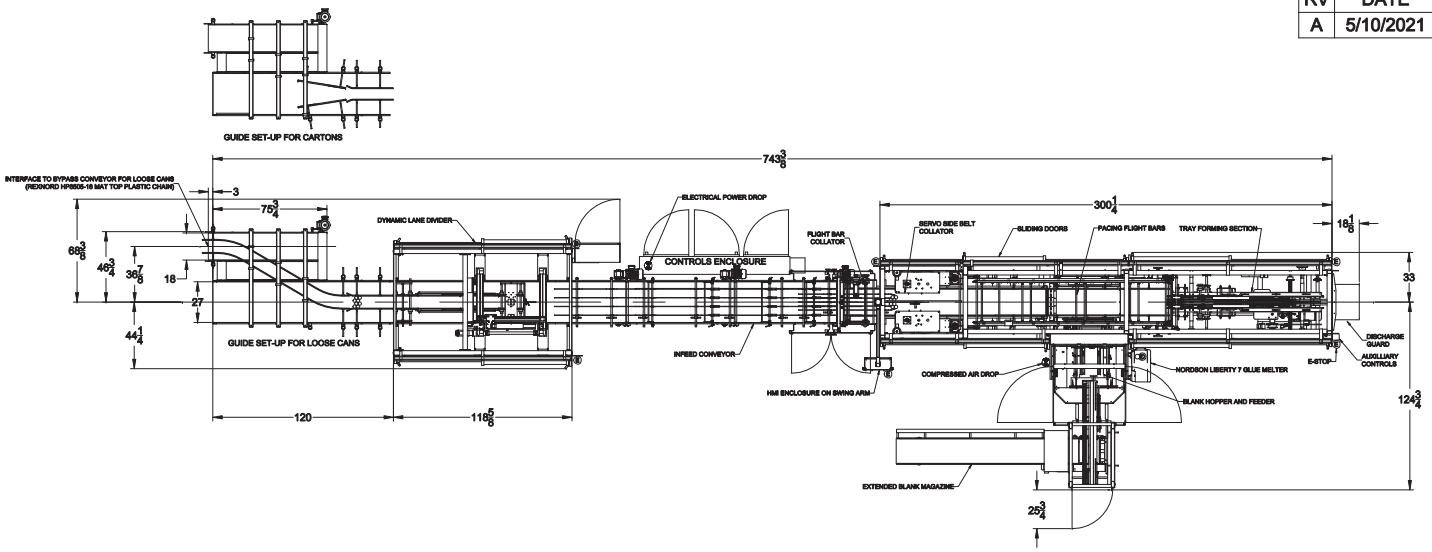


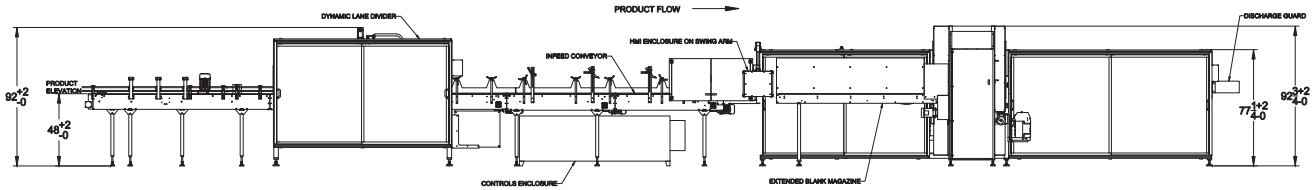


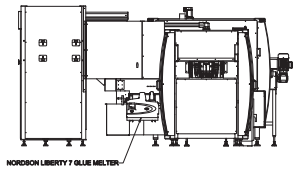


| PRODUCT INFORMATION | | PRODUCT IN | | | | PRODUCT OUT | | | |
|---|---|---|---|---|---|---|---|---|---|
| PROD # | PRODUCT DESCRIPTION | WIDTH | LENGTH | HT | RATE | PATTERN | WIDTH | LENGTH | RATE |
| 1 | 355 ML 12 COUNT LOOSE | 2.26 | 2.26 | 6.13 | 744 | 4 X 3 X 1 | 9.04 | 6.78 | 62 |
| 2 | 355 ML 4-PACK CARTON, 6 PER TRAY | 4.52 | 4.52 | 6.13 | 200 | 3 X 2 X 1 | 13.56 | 9.04 | 34 |
| 3 | 355 ML 6-PACK CARTON, 4 PER TRAY | 6.78 | 4.52 | 6.13 | 134 | 2 X 2 X 1 | 13.56 | 9.04 | 34 |
| 4 | 355 ML 12-PACK CARTON, 2 PER TRAY | 9.04 | 6.78 | 6.13 | 67 | 2 X 1 X 1 | 13.56 | 9.04 | 34 |
| 5 | 355 ML 24-PACK CARTON, 1 PER TRAY | 13.56 | 9.04 | 6.13 | 62 | 1 X 1 X 1 | 13.56 | 9.04 | 62 |
| 6 | 12 OZ 12 COUNT LOOSE | 2.60 | 2.60 | 4.81 | 744 | 4 X 3 X 1 | 10.40 | 7.80 | 62 |
| 7 | 12 OZ 24 COUNT LOOSE | 2.60 | 2.60 | 4.81 | 800 | 4 X 6 X 1 | 10.40 | 15.60 | 34 |
| 8 | 12 OZ 4-PACK CARTON, 6 PER TRAY | 5.20 | 5.20 | 4.81 | 200 | 3 X 2 X 1 | 15.60 | 10.40 | 34 |
| 9 | 12 OZ 6-PACK CARTON, 4 PER TRAY | 7.80 | 5.20 | 4.81 | 134 | 2 X 2 X 1 | 15.60 | 10.40 | 34 |
| 10 | 12 OZ 12-PACK CARTON, 2 PER TRAY | 7.80 | 10.40 | 4.81 | 67 | 2 X 1 X 1 | 15.60 | 10.40 | 34 |
| 11 | 12 OZ 24-PACK CARTON, 1 PER TRAY | 15.60 | 10.40 | 4.81 | 62 | 1 X 1 X 1 | 15.60 | 10.40 | 62 |
| 12 | 16 OZ 12 COUNT LOOSE | 2.60 | 2.60 | 6.13 | 744 | 4 X 3 X 1 | 10.40 | 7.80 | 62 |
| 13 | 16 OZ 24 COUNT LOOSE | 2.60 | 2.60 | 6.13 | 800 | 4 X 6 X 1 | 10.40 | 15.60 | 34 |
| 14 | 16 OZ 4-PACK CARTON, 6 PER TRAY | 5.20 | 5.20 | 6.13 | 200 | 3 X 2 X 1 | 15.60 | 10.40 | 34 |
| 15 | 16 OZ 6-PACK CARTON, 4 PER TRAY | 7.80 | 5.20 | 6.13 | 134 | 2 X 2 X 1 | 15.60 | 10.40 | 34 |
| 16 | 16 OZ 12-PACK CARTON, 2 PER TRAY | 7.80 | 10.40 | 6.13 | 67 | 2 X 1 X 1 | 15.60 | 10.40 | 34 |
| 17 | 16 OZ 24-PACK CARTON, 1 PER TRAY | 15.60 | 10.40 | 6.13 | 62 | 1 X 1 X 1 | 15.60 | 10.40 | 62 |

ANY PRODUCTS SPECIFIED ABOVE THAT ARE NOT PROVIDED FOR MACHINE SETUP/TESTING AT ARPAC, INCLUDING CONSUMABLES (CORRUGATE, FILM, GLUE), WILL REQUIRE ADDITIONAL SETUP/TESTING IN THE FIELD AT THE STANDARD SERVICE AND ENGINEERING RATE.

## TECHNICAL INFORMATION

PRODUCT ELEVATION: 48" +2/-0
ELECTRICAL POWER: 460V 60HZ 3PH, 70 FULL LOAD AMPS
MAIN CIRCUIT BREAKER AMPERAGE: 90A, 5KA SCCR
COMPRESSED AIR: 80 PSI (OPERATING PRESSURE) 20 SCFM
AMBIENT TEMPERATURE LESS THAN 95 DEG F
ARPAC PAINT COLORS: BLACK & SILVER
IP ADDRESS SCHEME: 10.255.255.XXX
PLC FIRMWARE VERSION: STUDIO 5000 V32
HMI FIRMWARE VERSION: FACTORY TALK STUDIO V10

Approved By:_____
Signature:_____
Date:_____
RETURN TO:
ARPAC

ARPAC A DURAVANT COMPANY
9555 WEST IRVING PARK RD.
SCHILLER PARK, IL 60176

| | | | |
|---|---|---|---|
| DRAWN: 4/22/2021 | BY: SRA | SCALE: N/A | SIZE: B |
| RELEASED: | FILENAME S220562-1-1 | APPROVED BY: | |
| DESCRIPTION: LAYOUT, TRAY LOADER, TS-2300 | | | |
| BLUE MARBLE PRODUCTIONS | | DRAWING NUMBER: S220562-1-1 | |

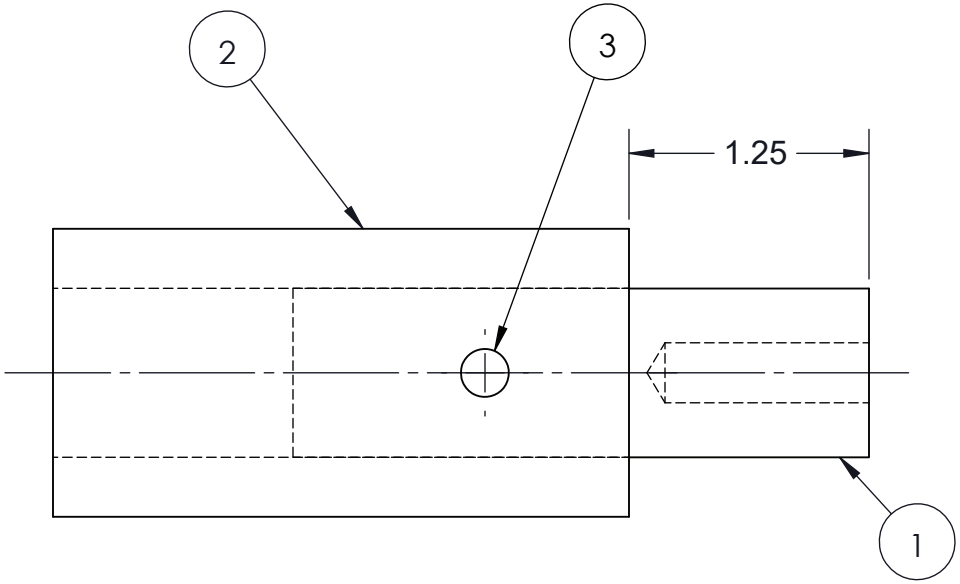


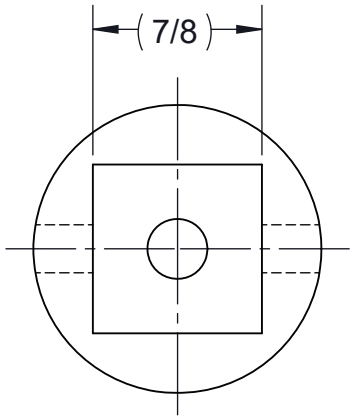


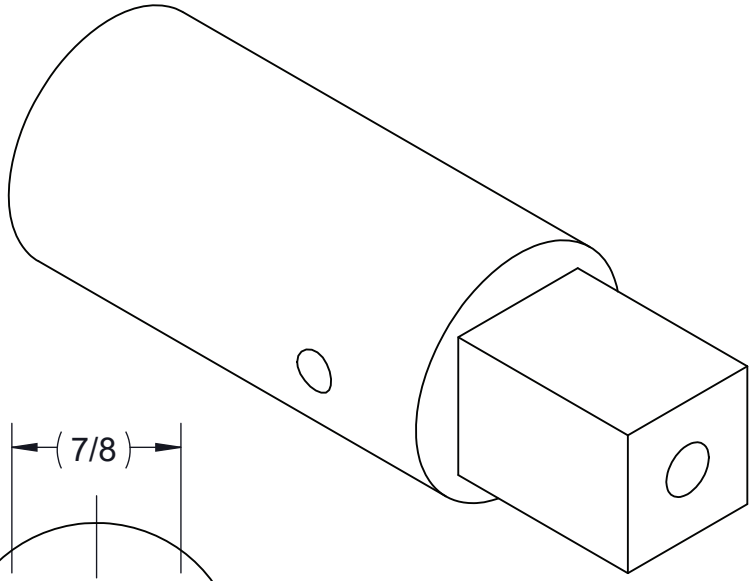

| ITM | QTY | PART NUM | DESCRIPTION |
|---|---|---|---|
| 3 | 1 | 800318-002 | PIN, ROLL, 1/4X3/4 LG |
| 2 | 1 | 135004 | SLEEVE, 7/8 SQ. |
| 1 | 1 | 134996 | SHAFT, 7/8 SQ. |

BILL OF MATERIALS

ARPAC
9511 WEST RIVER ST.
SCHILLER PARK, IL 60176

UNLESS OTHERWISE SPECIFIED
ALL DIMENSIONAL TOLERANCES:

| | |
|---|---|
| FRACTIONS | ± 1/64 |
| TWO (2) DECIMALS | ± 0.010 |
| THREE (3) DECIMALS | ± 0.005 |
| ANGLES | ± 0.5° |

| | | | | | | | |
|---|---|---|---|---|---|---|---|
| DRAWN: | 8-13-99 | BY: | FEB | SCALE: | 1:1 | SIZE: | A |
| RELEASED: | 8-13-99 | FILENAME: | 135005 | APPROVED BY: | FEB | | |

DESCRIPTION: ASSY, SLEEVE, SQUARE

DRAWING NUMBER: 135005

FINISH- NONE

| REVISIONS | | | |
|---|---|---|---|
| RV | DATE | BY | DESCRIPTION |
| A | 4/23/2018 | HG | 19-5/64 WAS 18-21/64 |

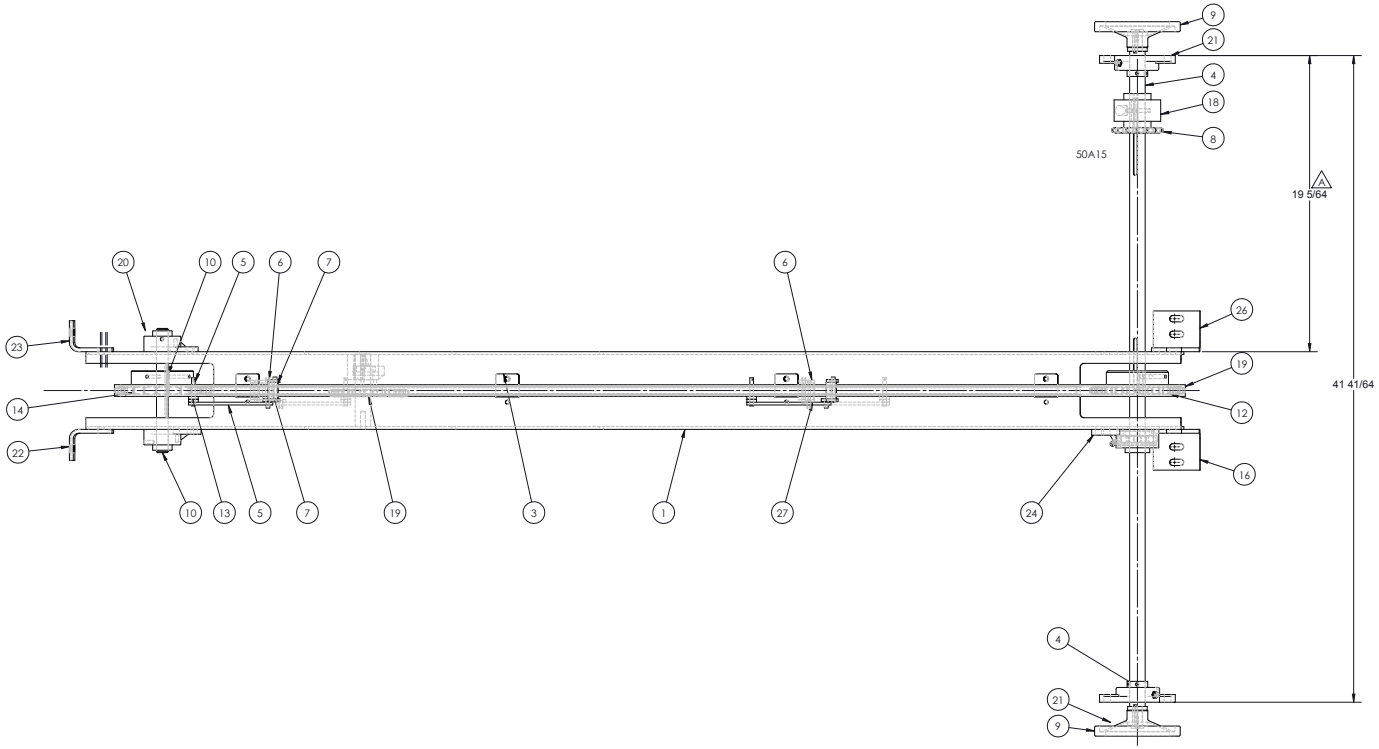


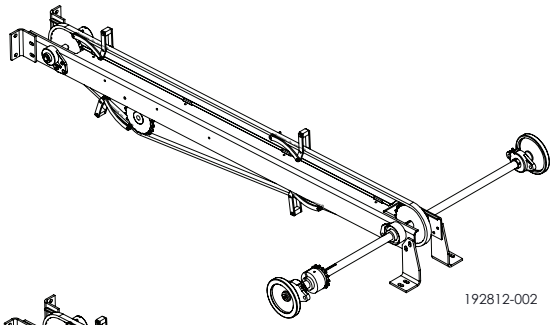


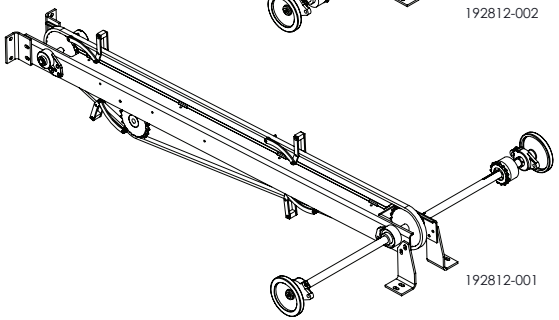


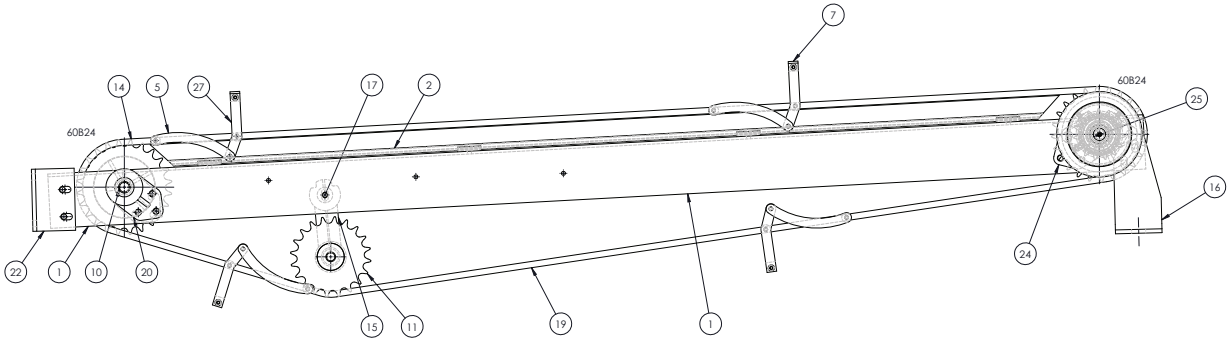


36" PITCH X 4 = 144"

192812-001 LH MACHINE, AS SHOWN
192812-002 RH MACHINE, OPPOSITE

| ITM | QTY | PART NUM | DESCRIPTION |
|---|---|---|---|
| 27 | 4 | 199589 | ARM, LUG W/PINS, BLANK, CONV., LH MACH |
| 26 | 1 | 195403-002 | BKT, FRONT, BLANK CONV, LH |
| 25 | 2 | 809370 | FSNR, WASHER, C'SINK, 4MM, TYPE GN184 |
| 24 | 1 | 837218 | BRG, FLG, 1 ID, 3-BOLT, STD DUTY |
| 23 | 1 | 191144-001 | BRACKET, TAIL, BLANK, CONV, LH |
| 22 | 1 | 191144 | BRACKET, TAIL, BLANK, CONV, RH |
| 21 | 2 | 827116 | BRG, FLG, 1 ID, 2-BOLT, 3.89 BOLT CNTRS |
| 20 | 2 | 306773 | BRG, FLG, 3/4 ID, 3-BOLT STANDARD-DUTY |
| 19 | 12 | 800489 | CHAIN, RLR, #60, HOLLOW PIN PLEASE ORDER TSUBAKI ONLY |
| 18 | 1 | 800609 | CPLG, PHASE-LOCK, HDI-25-1 1 BORE |
| 17 | 1 | 191142 | SHAFT, IDLER CONV., BLANK |
| 16 | 1 | 195403-001 | BKT, FRONT, BLANK CONV, RH |
| 15 | 1 | 809688 | TENSIONER, SATP |
| 14 | 1 | 192817 | SPKT, 60B24, MOD, 0.750 BORE |
| 13 | 8 | 110024 | SPACER, TOGGLE, DOG BLANK |
| 12 | 1 | 126423 | SPKT, 60B24 |
| 11 | 1 | 110022-001 | SPKT, 60A20, MOD, 1.750 BORE |
| 10 | 1 | 191145 | SHAFT, IDLER |
| 9 | 2 | 809078 | HD.WH, SAFETY, W/CPLG, 5/8 B., 5 1/2OD |
| 8 | 1 | 113060 | SPKT, 50A15, MOD, 1.000 BORE |
| 7 | 4 | 108844 | SPACER, LUG PUSHER |
| 6 | 4 | 199591 | ARM, LUG |
| 5 | 4 | 137849 | ARM, PIVOT, LH |
| 4 | 1 | 187247 | SHAFT, DRIVE, CONV., BLANK |
| 3 | 4 | 801359 | CLAMP, RAIL, SINGLE, 1.5 LG, SS, ROUND HOLE |
| 2 | 1 | 192598-000A | CHAIN, GUIDE #60 |
| 1 | 1 | 192815 | CHANNEL, FORMED, CONV, BLANK |

BILL OF MATERIALS

ARPAC
9511 WEST RIVER ST.
SCHILLER PARK, IL 60176

UNLESS OTHERWISE SPECIFIED:
ALL DIMENSIONAL TOLERANCES:
FRACTIONS: ± 1/64
TWO (2) DECIMALS ± 0.010
THREE (3) DECIMALS ± 0.005
ANGLES ± 0.5°

| DRAWN: 06/14/2001 | BY: FEB | SCALE: 0.25:1 | SIZE: D |
|---|---|---|---|
| RELEASED: 06/14/2001 | FILENAME: 192812 | APPROVED BY: FEB | |

DESCRIPTION:
ASSY, CONV, FEED, BLANK

DRAWING NUMBER:
192812

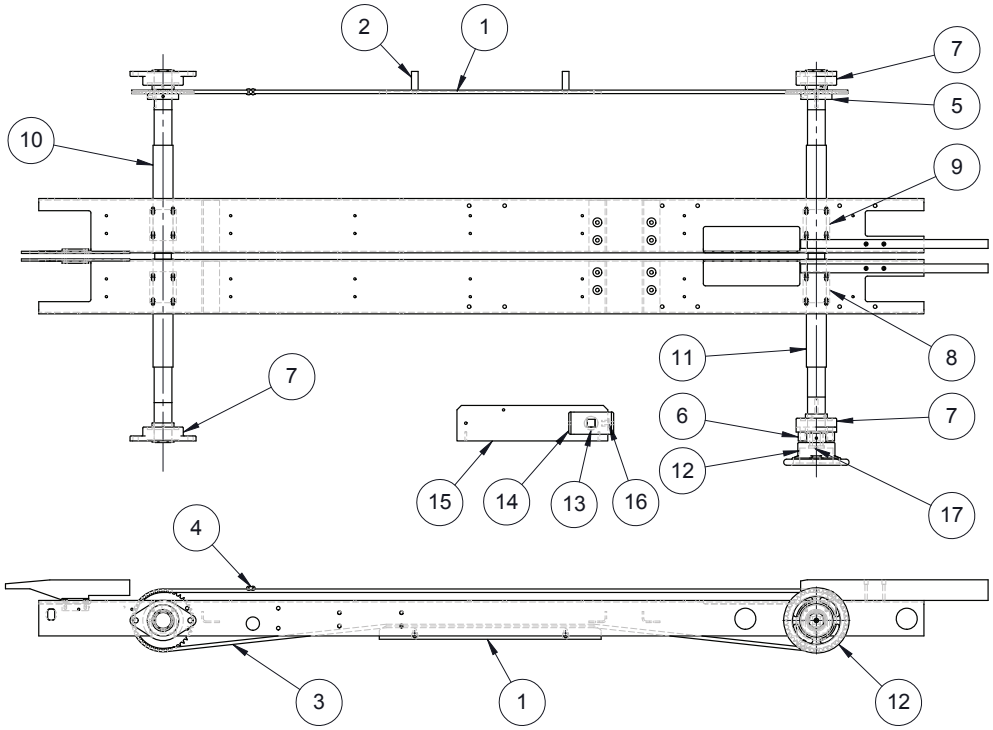


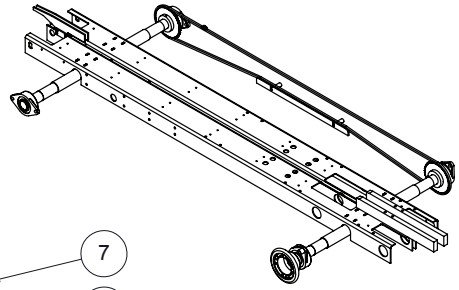

**220975**

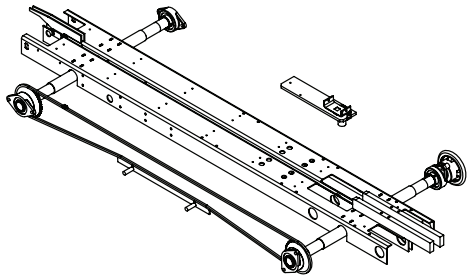

**220975-001**

| PART NUMBER | CONFIGURATION |
|---|---|
| 220975 | LH, AS SHOWN |
| 220975-001 | RH, OPPOSITE |

| ITM | QTY | PART NUM | DESCRIPTION |
|---|---|---|---|
| 17 | 1 | 324796 | WASHER, SPECIAL |
| 16 | 1 | 260166 | PROX BRACKET |
| 15 | 1 | 241985 | PLT, MTG, RANGE |
| 14 | 1 | 238683 | WLDMT, WRENCH, INSERT |
| 13 | 1 | 324771 | SLEEVE, 7/8 SQ HOLE |
| 12 | 1 | 324793 | HANWHEEL, WITH INDICATOR |
| 11 | 1 | 190806 | ADJUST SCREW, W/ HANDLE |
| 10 | 1 | 190805 | ADJUST SCREW, W/OUT HANDLE |
| 9 | 2 | 220981 | BLK, LH THREAD, RAIL ADJ |
| 8 | 2 | 220980 | BLK, RH THREAD, RAIL ADJ |
| 7 | 4 | 805929 | BRG, FLG, 2 ID, 2-BOLT STANDARD-DUTY |
| 6 | 2 | 134997 | SPACER, 1" OD X 17/32 ID |
| 5 | 2 | 104853 | 40B-42 SPROCKET, MOD, 2 BORE |
| 4 | 1 | 800502 | LINK, CONN, #40, |
| 3 | 1 | 800462-002 | CHAIN, RLR, #40, RLR RVT, |
| 2 | 2 | 107918-100 | CHAIN TAKE-UP SPACER |
| 1 | 1 | 108213 | SUPPORT, GUIDE CHAIN |

BILL OF MATERIALS

ARPAC
9511 WEST RIVER ST.
SCHILLER PARK, IL 60176

UNLESS OTHERWISE SPECIFIED
ALL DIMENSIONAL TOLERANCES:

| | |
|---|---|
| FRACTIONS | ± 1/64 |
| TWO (2) DECIMALS | ± 0.010 |
| THREE (3) DECIMALS | ± 0.005 |
| ANGLES | ± 0.5° |

| | | | | | |
|---|---|---|---|---|---|
| DRAWN: 10/03/2001 | BY: | TTR | SCALE: | 1:14 | SIZE: B |
| RELEASED: | FILENAME: | 220975 | APPROVED BY: | TTR | |

DESCRIPTION: ASSY, SCREW, ADJ

DRAWING NUMBER: 220975

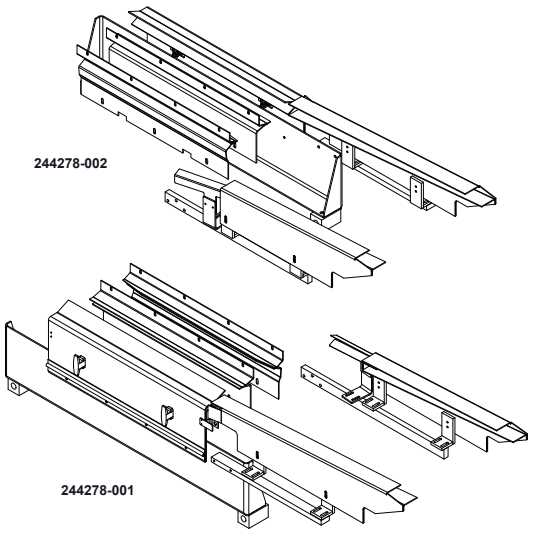


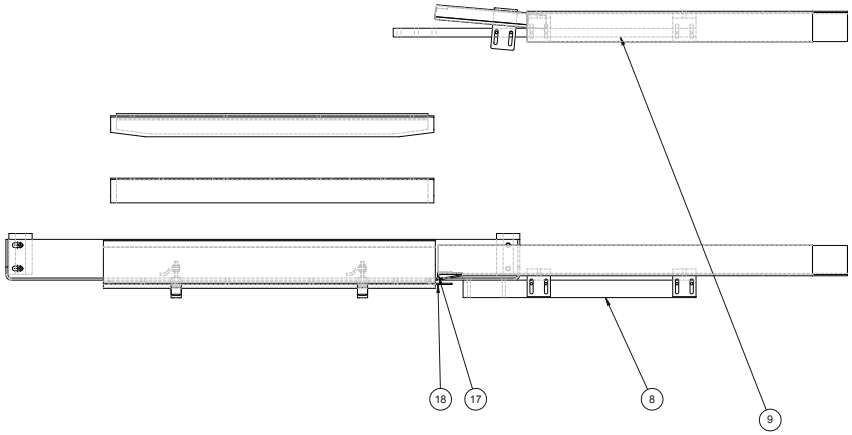


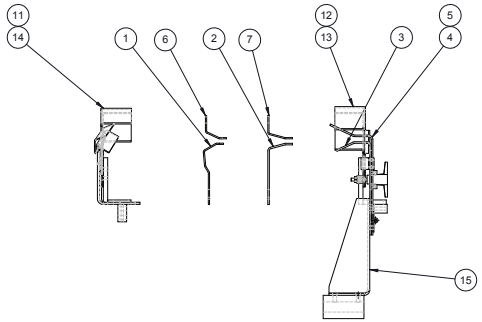


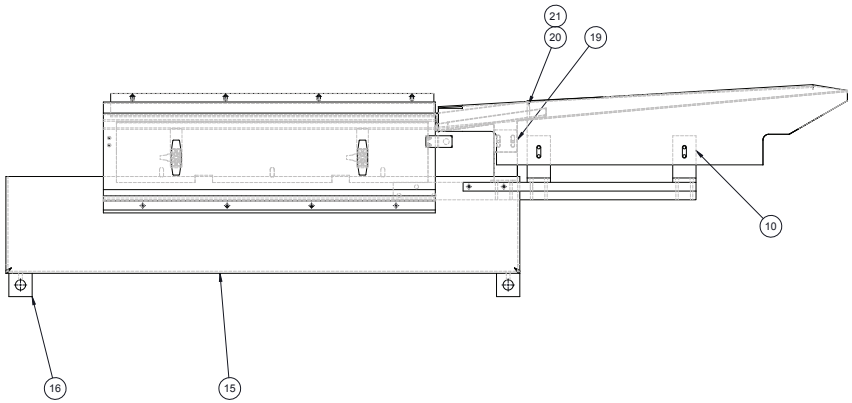


| PART NUMBER | DESCRIPTION | ITEM 12 | PART DESCRIPTION | ITEM 13 | PART DESCRIPTION |
|---|---|---|---|---|---|
| 244278-001 | LH, AS SHOWN | 193138 | BLANK, SUPPORT, BOTTOM, MAGAZINE SIDE | 193139 | BLANK, SUPPORT, BOTTOM, DOOR SIDE |
| 224278-002 | RH, OPPOSITE | 193141 | GUIDE, SIDE, BLANK, MAGAZINE SIDE | 193140 | GUIDE, SIDE, BLANK, DOOR SIDE |

| ITM | QTY | PART NUM | DESCRIPTION |
|---|---|---|---|
| 21 | 1 | 244294-001 | BLANK GUIDE, BOTTOM,LH |
| 20 | 1 | 244293-001 | BLANK GUIDE, TOP, LH |
| 19 | 1 | 244292 | BKT, BLANK GUIDE |
| 18 | 1 | 242173 | BKT, PROX, TARGET |
| 17 | 1 | 242172 | BKT, PROX |
| 16 | 2 | 193143 | NUT, REAR DOOR, LH THD. |
| 15 | 1 | 193142-002 | MNT, DOOR, RH MACH |
| 14 | 1 | 244266-002 | GUIDE, SIDE, BLANK, LH |
| 13 | 1 | 193141 | GUIDE, SIDE, BLANK |
| 12 | 1 | 193138 | BLANK SUPPORT, BOTTOM |
| 11 | 1 | 244267-002 | SUPPORT, BOTTOM, BLANK, LH |
| 10 | 4 | 187499 | BRACKET |
| 9 | 1 | 193137 | BAR, BLANK GUIDE HOLDER |
| 8 | 1 | 193136 | BAR,BLANK GUIDE SUPPORT |
| 7 | 1 | 193174 | LIMITOR, TOP, BLANK |
| 6 | 1 | 193173 | LIMITOR, TOP, BLANK |
| 5 | 2 | 802653 | LATCH, VISE-ACTION |
| 4 | 1 | 187546 | DOOR |
| 3 | 1 | 187545 | SUPPORT LOWER DOOR |
| 2 | 1 | 193135 | SUPPORT, BLANK |
| 1 | 1 | 193134 | SUPPORT, BLANK |

BILL OF MATERIALS

ARPAC
9511 WEST RIVER ST.
SCHILLER PARK, IL 60176

UNLESS OTHERWISE SPECIFIED:
ALL DIMENSIONAL TOLERANCES:
FRACTIONS: ± 1/64
TWO (2) DECIMALS ± 0.010
THREE (3) DECIMALS ± 0.005
ANGLES ± 0.5°

DRAWN: 4/09/2007 BY: LLS SCALE: 0.1875:1 SIZE: D
RELEASED: 4/09/2007 FILENAME: 244278 APPROVED BY: LLS

DESCRIPTION:
ASSY, BLANK, SUPPORT & GUIDE

DRAWING NUMBER:
244278

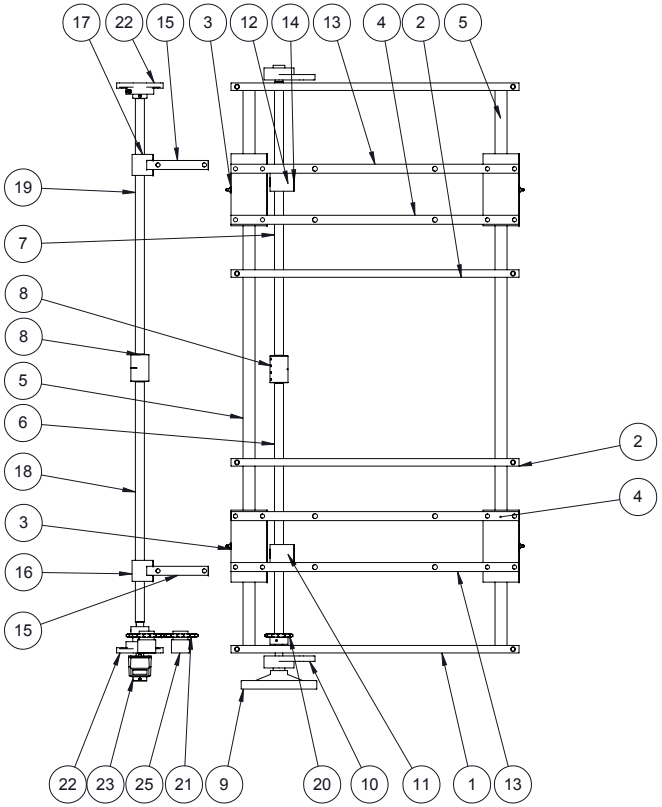


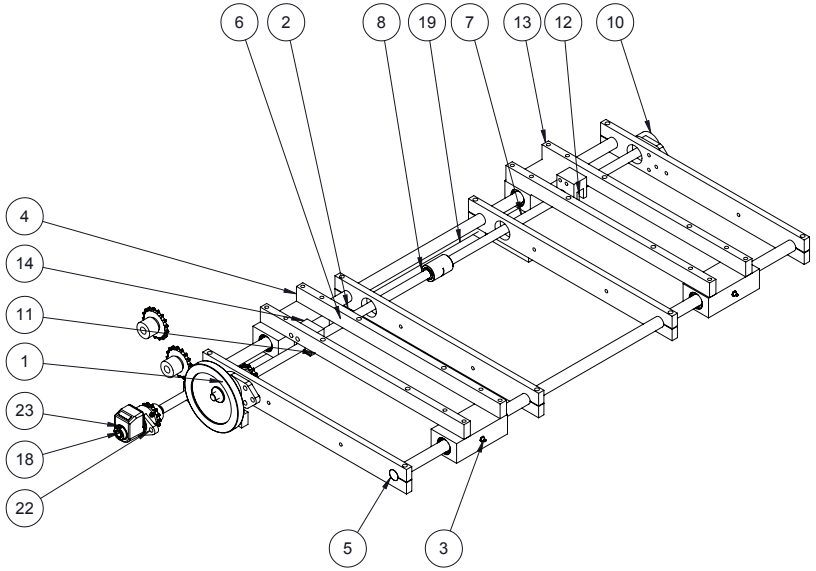


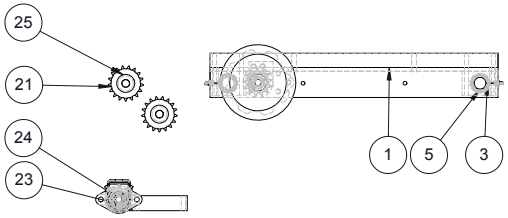


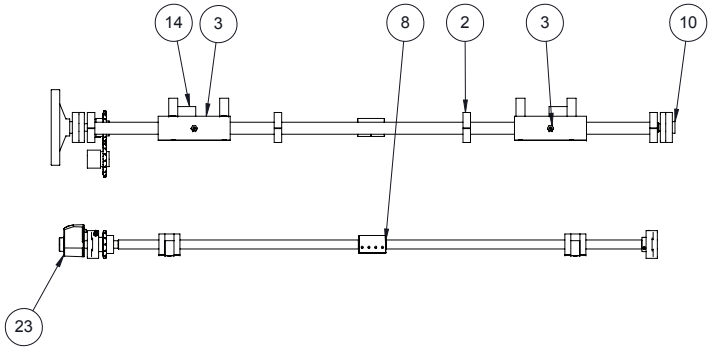


286728 AS SHOWN
286728-001 OPPOSITE

| ITM | QTY | PART NUM | DESCRIPTION |
|---|---|---|---|
| 25 | 2 | 294630 | SPACER, IDL SPKT |
| 24 | 1 | 822341 | SLEEVE, 5/8ID, 3/4OD |
| 23 | 1 | 822223 | COUNTER, POSITION, CODE: CE986019 |
| 22 | 2 | 807746 | BRG, FLG, 5/8 ID, 2-BOLT STANDARD-DUTY |
| 21 | 2 | 800906 | SPKT, 40BB17H, IDL, 5/8 ID, EXTREME SK9445 |
| 20 | 2 | 136727 | SPKT, 40B13, MOD, 0.625 BORE |
| 19 | 1 | 197876 | SHAFT, ADJUSTING, LOWER, LH THD |
| 18 | 1 | 197875 | SHAFT, ADJUSTING, LOWER, RH THD |
| 17 | 1 | 197874 | NUT, LH |
| 16 | 1 | 197873 | NUT, RH |
| 15 | 2 | 197872 | BLK |
| 14 | 2 | 197865 | BLK |
| 13 | 2 | 193214 | SPACER |
| 12 | 1 | 221899 | NUT, LH |
| 11 | 1 | 193213 | NUT, ADJ., RH THD |
| 10 | 2 | 802862 | BRG, FLG, 5/8 ID, 3-BOLT STANDARD-DUTY |
| 9 | 1 | 846703 | HANDWHEEL, 6.3 DIA, COATED AL DISK W/O HANDLE, 0.5BORE |
| 8 | 2 | 817248-001 | CPLG, 5/8 BORE, ONE-PIECE W/KEYWAY, SS |
| 7 | 1 | 193212 | ADJUSTING SHAFT - COLLATOR, TS 2000 |
| 6 | 1 | 193211 | ADJUSTING SHAFT - COLLATOR, TS 2000 |
| 5 | 2 | 193210 | SHAFT , GUIDE |
| 4 | 2 | 193209 | SPACER |
| 3 | 4 | 193204 | ASSY, BLK, BUSH, SHAFT, 1", 6" LG, INCLUDES CARRIAGE BUSH BLK |
| 2 | 2 | 193206 | CLAMP, GUIDE, SHAFT |
| 1 | 2 | 193205 | CLAMP, GUIDE, SHAFT |

BILL OF MATERIALS

ARPAC
9511 WEST RIVER ST.
SCHILLER PARK, IL 60176

UNLESS OTHERWISE SPECIFIED
ALL DIMENSIONAL TOLERANCES:

| | |
|---|---|
| FRACTIONS | ± 1/64 |
| TWO (2) DECIMALS | ± 0.010 |
| THREE (3) DECIMALS | ± 0.005 |
| ANGLES | ± 0.5° |

DRAWN: 9/22/2020 | BY: | SCALE: 1:8 | SIZE: C

FILENAME: 286728

DESCRIPTION:
ASSY, COLLATOR GUIDE & ADJ.

DRAWING NUMBER:
286728

| REVISIONS | | | |
|---|---|---|---|
| RV | DATE | BY | DESCRIPTION |
| A | 1/10/2014 | SRA | ITEM 9 WAS 802731 |
| B | 6/21/2016 | SRA | ITEM 1 WAS 101909 |

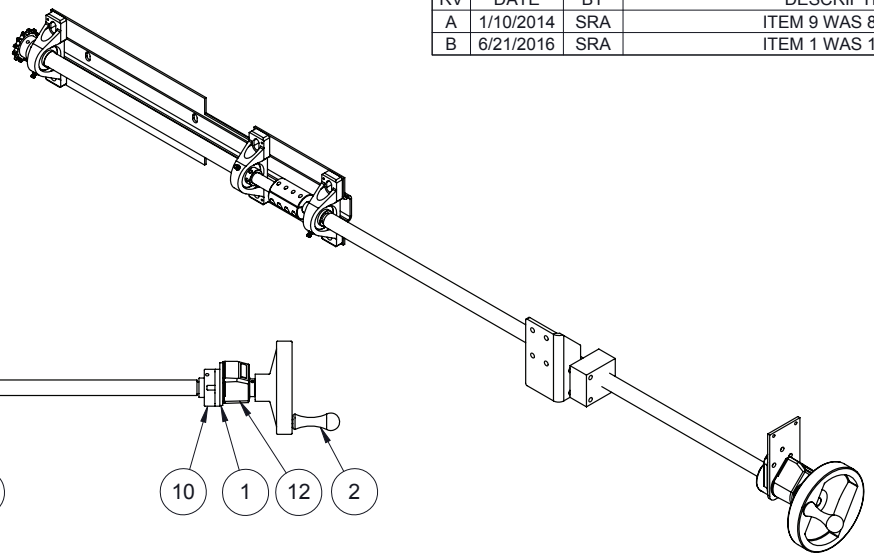

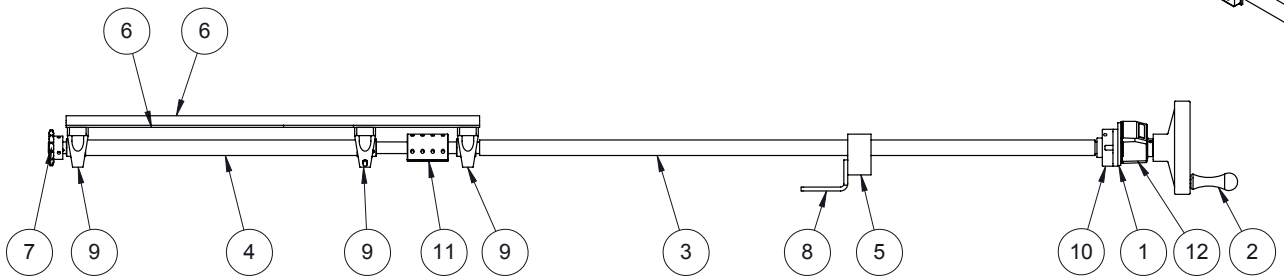


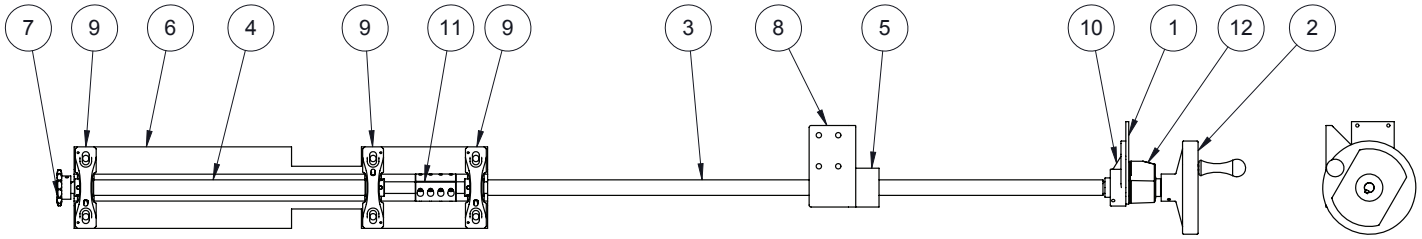


| ITM | QTY | PART NUM | DESCRIPTION |
|---|---|---|---|
| 12 | 1 | 822223 | COUNTER, POSITION, CODE: CE986019 |
| 11 | 1 | 816364 | CPLG, 3/4 BORE, SPLIT CLAMP 8-BOLT CLAMP |
| 10 | 1 | 306773 | BRG, FLG, 3/4 ID, 3-BOLT, MOD. |
| 9 | 3 | 827113 | BRG, BLK, PILLOW, 3/4 ID, INTERMEDIATE DUTY |
| 8 | 1 | 290836 | BKT, MNT, 1" -8 RH NUT |
| 7 | 1 | 850550 | SPKT, 40B13, MOD, 0.750 BORE, KWY&SS |
| 6 | 1 | 290794 | SPACER, BRG, MTG |
| 5 | 1 | 193145 | NUT, 1"-8, RIGHT HAND |
| 4 | 1 | 189865 | SHAFT, ADJ MAGAZINE |
| 3 | 1 | 189864 | SHAFT, MAG., ADJ., FRONT |
| 2 | 1 | 141354 | HAND WHEEL, SPECIAL |
| 1 | 1 | 290835 | PLT, MTG |

BILL OF MATERIALS

ARPAC
9511 WEST RIVER ST.
SCHILLER PARK, IL 60176

UNLESS OTHERWISE SPECIFIED
ALL DIMENSIONAL TOLERANCES:

| | |
|---|---|
| FRACTIONS | ± 1/64 |
| TWO (2) DECIMALS | ± 0.010 |
| THREE (3) DECIMALS | ± 0.005 |
| ANGLES | ± 0.5° |

| | | | | | |
|---|---|---|---|---|---|
| DRAWN: 10/27/2012 | BY: | SR | SCALE: | 1:8 | SIZE: B |
| RELEASED: 10/27/2012 | FILENAME: | 290792 | APPROVED BY: | SRA | |

DESCRIPTION:
ASSY, SCREW, ADJ, RH

DRAWING NUMBER:
290792

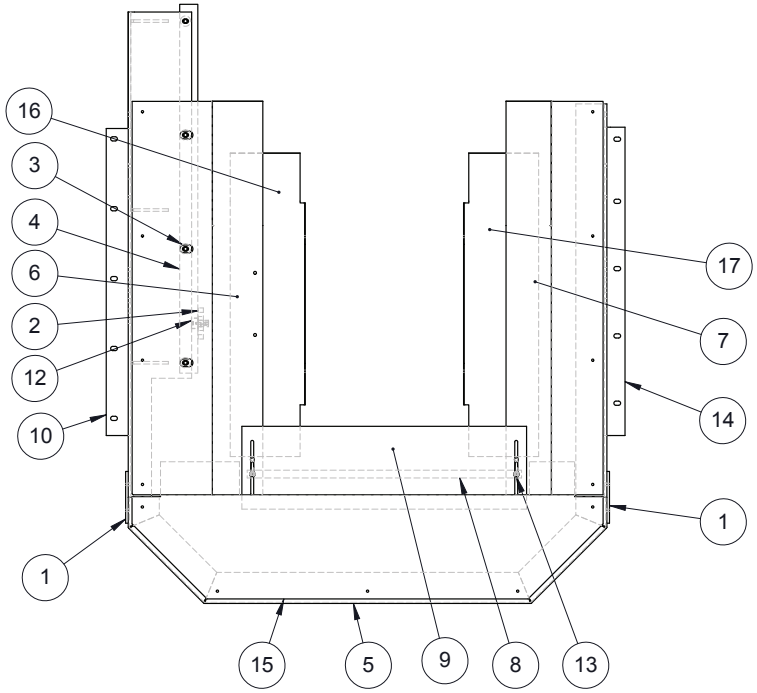


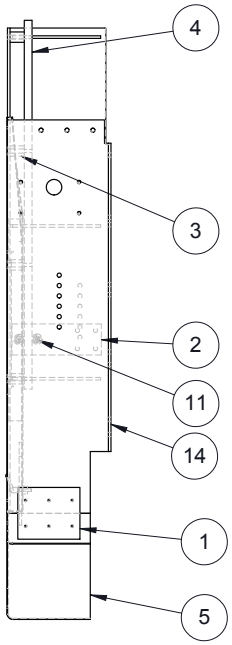


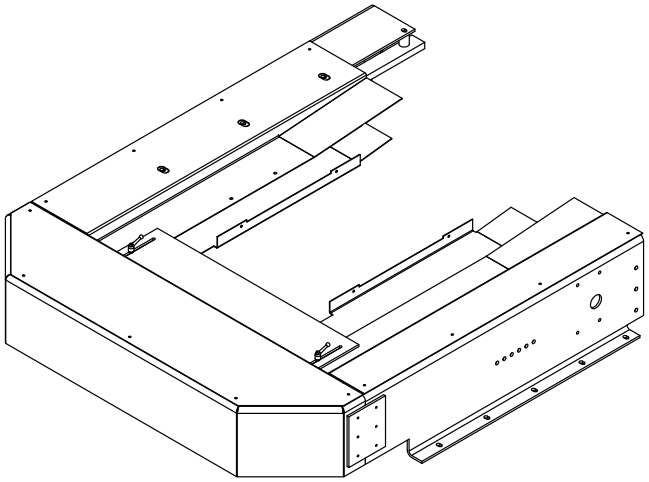

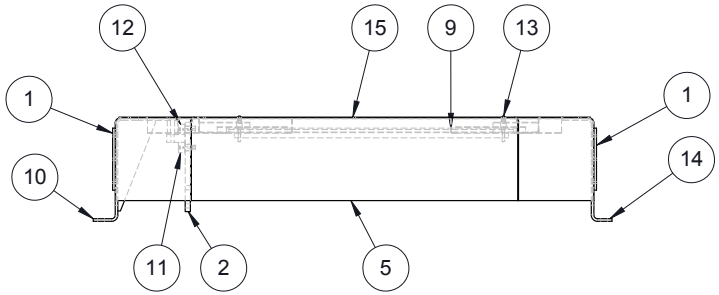


| ITM | QTY | PART NUM | DESCRIPTION |
|---|---|---|---|
| 17 | 1 | 282786-001 | GUARD, MAGAZINE, RH |
| 16 | 1 | 282786 | GUARD, MAGAZINE |
| 15 | 1 | 282746-001 | COVER, TOP, END |
| 14 | 1 | 195417-001 | CHANNEL, MAGAZINE, RH. LH MACHINE |
| 13 | 2 | 810224 | HDL, ADJ, SS, 1.57 LG 1/4-20 X 1.18 STUD |
| 12 | 1 | 809737 | FOLLOWER, CAM, 1 OD, 5/8-18 STUD, W/HEX HOLE, SEALED |
| 11 | 1 | 802881 | FOLLOWER, CAM, 1 OD, 7/16-20 STUD, CROWNED, ECCENTRIC 5/8 O.D |
| 10 | 1 | 290830 | WLDMT, CHANNEL, MAGAZINE, RH |
| 9 | 1 | 282750 | PLT, SLIDE, GUARD |
| 8 | 1 | 282749 | PLT, NUT |
| 7 | 1 | 282748-001 | COVER, TOP, DOWNSTREAM |
| 6 | 1 | 282747-001 | COVER, TOP, UPSTREAM |
| 5 | 1 | 193151 | COVER, BACK, MAGAZINE |
| 4 | 1 | 189870 | RAIL |
| 3 | 4 | 189860 | SPACER |
| 2 | 1 | 189859 | PLATE, BEARING MTG. |
| 1 | 2 | 188687 | PLATE, NUT |

BILL OF MATERIALS

ARPAC
9511 WEST RIVER ST.
SCHILLER PARK, IL 60176

UNLESS OTHERWISE SPECIFIED
ALL DIMENSIONAL TOLERANCES:

| | |
|---|---|
| FRACTIONS | ± 1/64 |
| TWO (2) DECIMALS | ± 0.010 |
| THREE (3) DECIMALS | ± 0.005 |
| ANGLES | ± 0.5° |

| | | | | | |
|---|---|---|---|---|---|
| DRAWN: 11/3/2012 | BY: | SR | SCALE: | 1:12 | SIZE: B |
| RELEASED: 11/3/2012 | FILENAME: | 290825 | APPROVED BY: | SRA | |

DESCRIPTION:
ASSY, MAGAZINE, GUIDE, SUPPORT, RH

DRAWING NUMBER:
290825

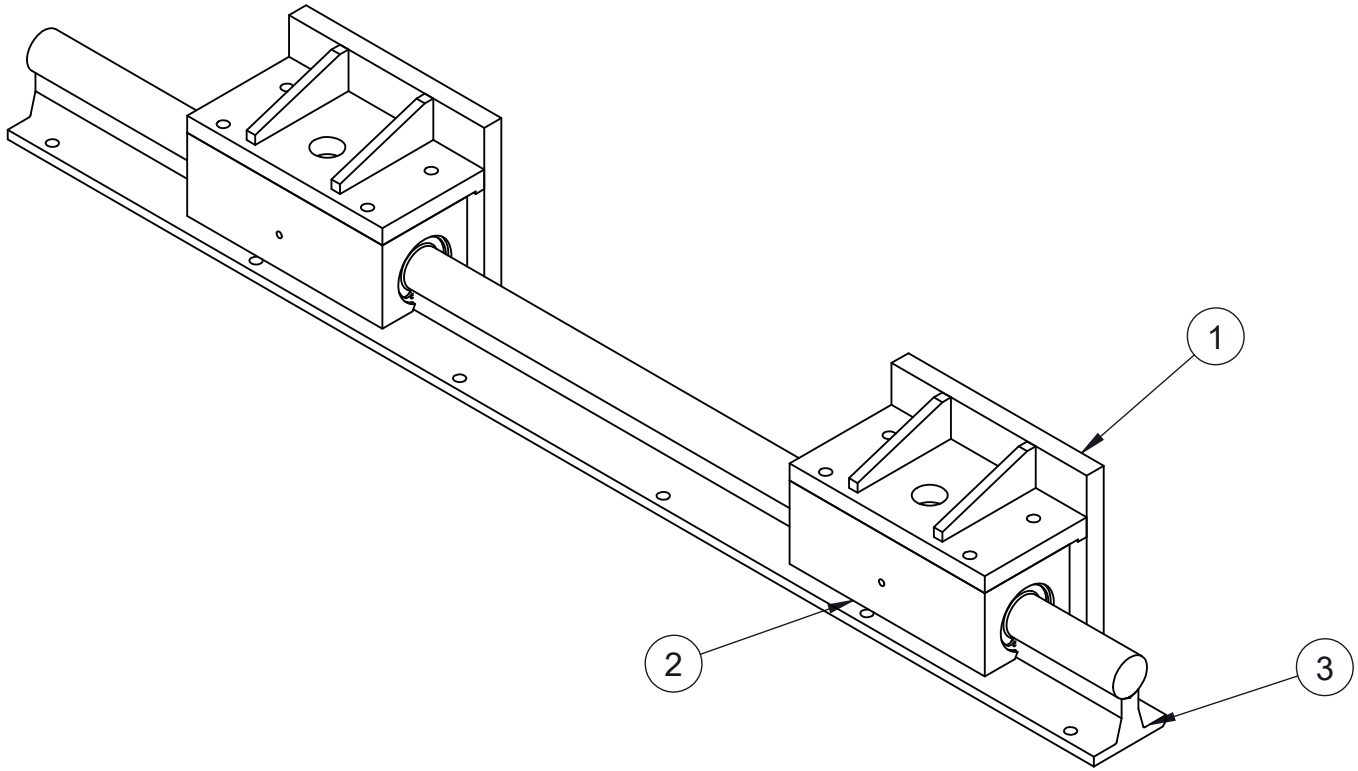


| ITM | QTY | PART NUM | DESCRIPTION |
|---|---|---|---|
| 3 | 1 | 187337 | SHAFT, RAIL |
| 2 | 2 | 187346 | ASSY, PILLOW BLOCK, OPEN |
| 1 | 2 | 189866 | BRACKET, MTG, SLIDE, BEARING |

BILL OF MATERIALS

ARPAC
9511 WEST RIVER ST.
SCHILLER PARK, IL 60176

UNLESS OTHERWISE SPECIFIED
ALL DIMENSIONAL TOLERANCES:

| | |
|---|---|
| FRACTIONS | ± 1/64 |
| TWO (2) DECIMALS | ± 0.010 |
| THREE (3) DECIMALS | ± 0.005 |
| ANGLES | ± 0.5° |

| | | | | | | | |
|---|---|---|---|---|---|---|---|
| DRAWN: | 10/27/12 | BY: | SR | SCALE: | 1:4 | SIZE: | A |
| RELEASED: | 10/27/2012 | FILENAME: | 290827 | | | | |

DESCRIPTION:
ASSY, MAGAZINE, GUIDE, RH

DRAWING NUMBER:
290827

| REVISIONS | | | |
|---|---|---|---|
| RV | DATE | BY | DESCRIPTION |
| A | 1/10/2014 | SRA | ITEM 5 WAS 802731 |
| B | 6/21/2016 | SRA | ITEM 2 WAS 101909 |

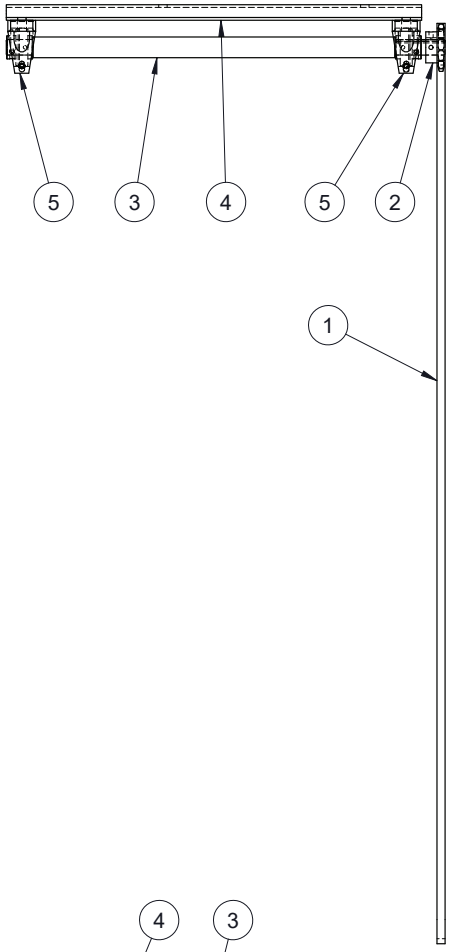


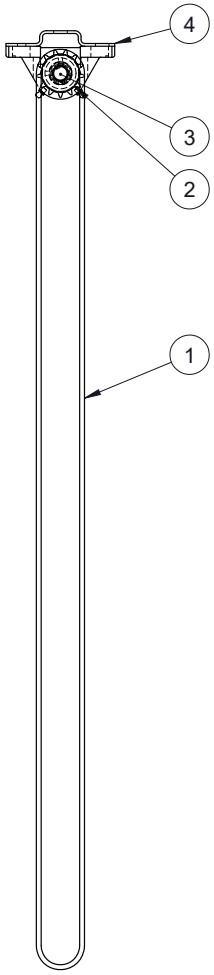


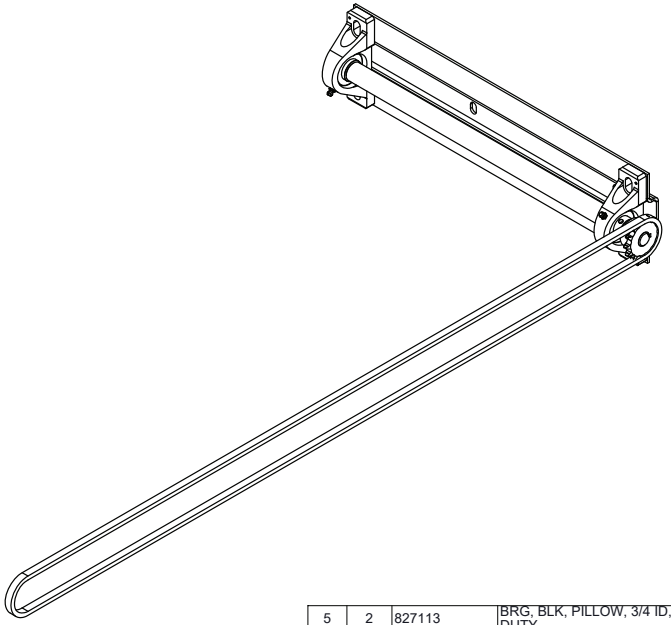

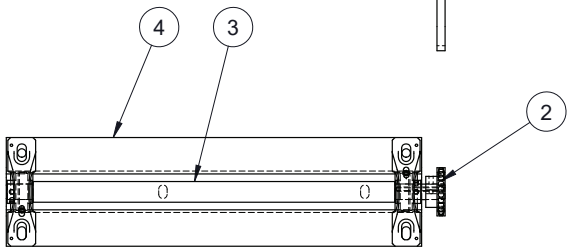


| ITM | QTY | PART NUM | DESCRIPTION |
|---|---|---|---|
| 5 | 2 | 827113 | BRG, BLK, PILLOW, 3/4 ID, INTERMEDIATE DUTY |
| 4 | 1 | 193148 | SPACER, BRG, MTG |
| 3 | 1 | 188681 | SHAFT, THREAD, REAR DOOR |
| 2 | 1 | 850550 | SPKT, 40B13, MOD, 0.750 BORE, AKA 101909 |
| 1 | 1 | 800462 | CHAIN, RLR, #40, RLR RVT |

BILL OF MATERIALS

ARPAC
9511 WEST RIVER ST.
SCHILLER PARK, IL 60176

UNLESS OTHERWISE SPECIFIED ALL DIMENSIONAL TOLERANCES:

| | |
|---|---|
| FRACTIONS | ± 1/64 |
| TWO (2) DECIMALS | ± 0.010 |
| THREE (3) DECIMALS | ± 0.005 |
| ANGLES | ± 0.5° |

| | | | | | |
|---|---|---|---|---|---|
| DRAWN: 10/27/12 | BY: SR | SCALE: 1:6 | SIZE: B | | |
| RELEASED: 10/27/2012 | FILENAME: 290828 | APPROVED BY: SRA | | | |

DESCRIPTION: ASSY, SCREW, ADJ, MAGAZINE

DRAWING NUMBER: 290828

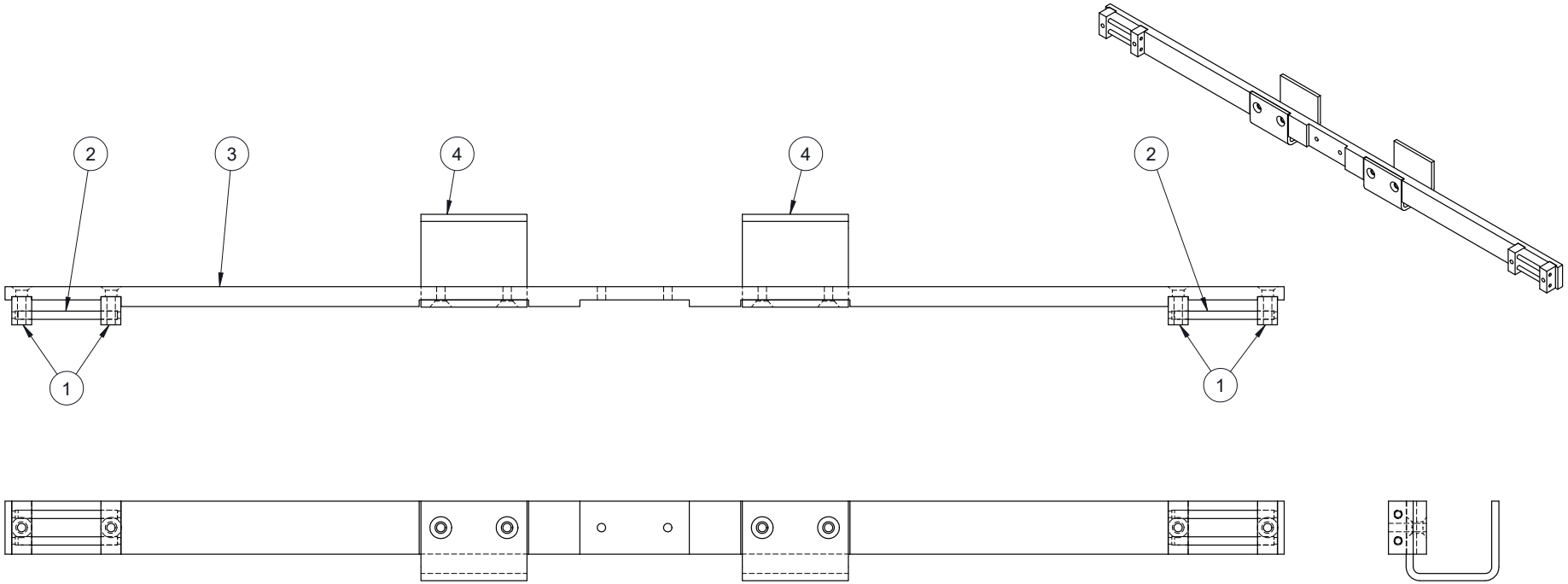


| ITM | QTY | PART NUM | DESCRIPTION |
|---|---|---|---|
| 4 | 2 | 187536 | PUSHER |
| 3 | 1 | 213237 | BAR, PUSHER |
| 2 | 4 | 213238 | PIN |
| 1 | 4 | 213236 | BLOCK |

BILL OF MATERIALS

ARPAC
9511 WEST RIVER ST.
SCHILLER PARK, IL 60176

UNLESS OTHERWISE SPECIFIED
ALL DIMENSIONAL TOLERANCES:

| | |
|---|---|
| FRACTIONS | ± 1/64 |
| TWO (2) DECIMALS | ± 0.010 |
| THREE (3) DECIMALS | ± 0.005 |
| ANGLES | ± 0.5° |

| | | | | | | | |
|---|---|---|---|---|---|---|---|
| DRAWN: | 10/26/12 | BY: | SR | SCALE: | 1:2 | SIZE: | B |
| RELEASED: | 10/26/2012 | FILENAME: | 290834 | APPROVED BY: | SRA | | |

DESCRIPTION:
ASSY, BAR, CHAIN, MAGAZINE FEED

DRAWING NUMBER:
290834

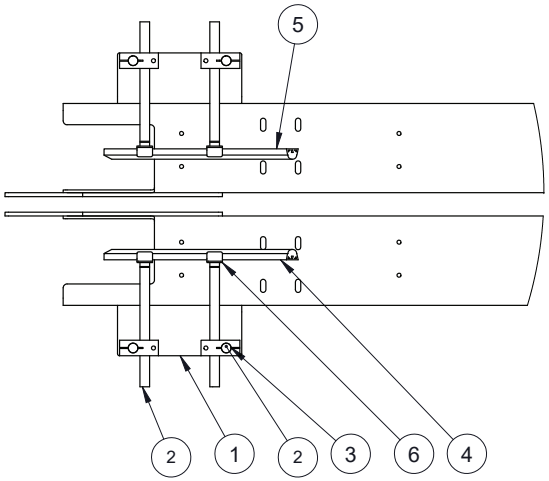


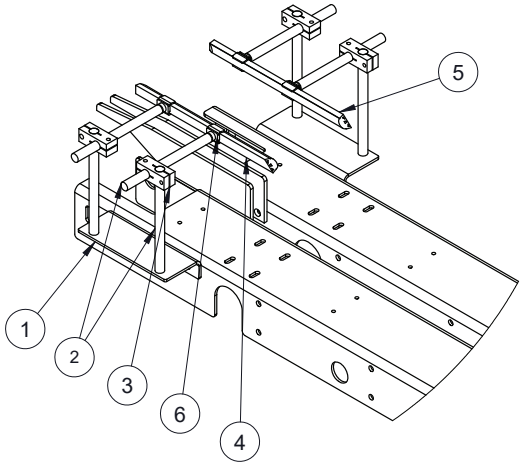


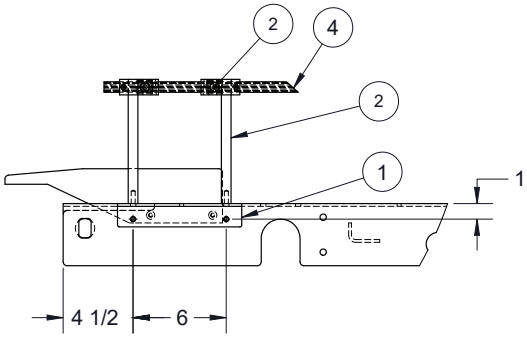


| ITM | QTY | PART NUM | DESCRIPTION |
|---|---|---|---|
| 6 | 4 | 807831 | CLIP, RAIL, SELFTIGHTENING, 5/16 STUD X 5/8 LG, SS, HEAVY DUTY |
| 5 | 1 | 283419-002 | GUIDE, SIDE, PRODUCT, LH |
| 4 | 1 | 283419-001 | GUIDE, SIDE, PRODUCT, RH |
| 3 | 4 | 283373 | BLK, CLAMP |
| 2 | 8 | 810231 | ROD, ADJ, 5/8 X 8 LG, 5/16-18 TAP, SS |
| 1 | 2 | 283368 | BKT, MTG, GUIDE |

BILL OF MATERIALS

ARPAC
9511 WEST RIVER ST.
SCHILLER PARK, IL 60176

UNLESS OTHERWISE SPECIFIED ALL DIMENSIONAL TOLERANCES:

| | |
|---|---|
| FRACTIONS | ± 1/64 |
| TWO (2) DECIMALS | ± 0.010 |
| THREE (3) DECIMALS | ± 0.005 |
| ANGLES | ± 0.5° |

| | | | | | |
|---|---|---|---|---|---|
| DRAWN: 12/3/2012 | BY: SRA | SCALE: 1:8 | SIZE: B | | |
| RELEASED: 12/3/2012 | FILENAME: 291515 | APPROVED BY: SRA | | | |

DESCRIPTION: ASSY, GUIDE, SIDE, PRODUCT

DRAWING NUMBER: 291515

| REVISIONS | | | |
|---|---|---|---|
| RV | DATE | BY | DESCRIPTION |
| A | 8/18/2016 | SRA | CHANGED POSITIONS OF ITEMS 8, 9, 36, AND 37 |
| B | 11/15/2016 | SRA | ITEM 41 WAS PART # 846368 |

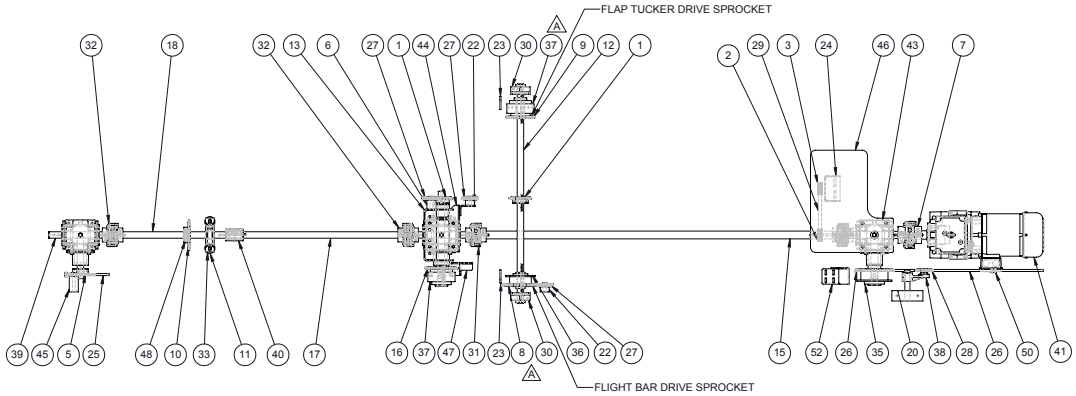


ITEM 52 NOT SHOWN

| | | | |
|---|---|---|---|
| 52 | 1 | 272049 | BKT, MTG, PROX |
| 51 | 1 | 810218 | BUSH, 1-3/8 BORE |
| 50 | 1 | 800516 | LINK, CONN. #60, COATED |
| 49 | 1 | 800505 | LINK, CONN, #50 |
| 48 | 1 | 803668-002 | LOCKING DEVICE, KEYLESS 3/4 |
| 47 | 1 | 272050-001 | WLDMT, BKT, MTG, PROX |
| 46 | 1 | 228961-001 | GUARD, ENCODER, DRIVE |
| 45 | 1 | 129863-002 | SPACER, IDLER, 2 1/2 |
| 44 | 1 | 221623-001 | WLDMT, MTG, IDL, GEARBOX |
| 43 | 1 | 825367 | GEARBOX, BEVEL, 1:1, SPIRAL GEARS, 1-3/8 DIA. ALL SHAFTS, TYPE E |
| 42 | 1 | 823018 | GEARBOX, BEVEL, 1:1, SPIRAL GEARS, 1-1/4 D ALL SHAFT, TYPE GG |
| 41 | 1 | 851244 | GEARMOTOR, HELICAL, INLINE, 5 HP, 230/460V, RATIO: 24.41, 1755 RPM MOTOR SPEED, PREMIUM EFFICIENCY |
| 40 | 1 | 816281 | CPLG, 1.25 X 1.25, KEYED |
| 39 | 1 | 809942 | GEARBOX, BEVEL, 1:1, SPIRAL GEARS, 1-1/4 D ALL SHAFT, TYPE A |
| 38 | 1 | 809688 | TENSIONER, SATP |
| 37 | 2 | 808643 | CLUTCH, OVERLOAD, BORE 1 1/4, PROX PLT, SET TO 75 IN-#, W/ARPAC # |
| 36 | 1 | 808642 | CLUTCH, OVERLOAD, BORE 1 1/4, PROX PLT, SET TO 500 IN-#, WARPAC # |
| 35 | 1 | 808641 | CLUTCH, OVERLOAD, W/O BUSHING, PROX PLT, SET TO 1000 IN-#, W/ARPAC # |
| 34 | 1 | 808474 | CPLG, DISC SINGLE FLEX 1-1/2 X 1-3/8 |
| 33 | 1 | 807444 | BRG, PILLOW BLK, 1-1/4 ID |
| 32 | 2 | 807271 | CPLG, DISC SINGLE FLEX |
| 31 | 1 | 803815 | CPLG, DISC SINGLE FLEX 1-1/2 X 1-1/4 |
| 30 | 2 | 802835 | BRG, FLG, 1-1/4 ID, 3-BOLT STANDARD-DUTY |
| 29 | 1 | 801160 | BELT, TIMING, 5MM P, 15MM W, 670MM LG. |
| 28 | 1 | 800915 | SPKT, 60BB13H, IDLER, 5/8 ID |
| 27 | 4 | 800905 | SPKT, 50BB15H, IDLER, 5/8 ID, HARDENED TEETH |
| 26 | 1 | 800486 | CHAIN, RLR, #60 |
| 25 | 1 | 800468 | CHAIN, RLR, #50 |
| 24 | 1 | 283170 | BKT, MTG, ENCODER |
| 23 | 2 | 272670 | BKT, PROX. |
| 22 | 2 | 226433 | SPACER, IDLER |
| 21 | 2 | 225523 | SPACER, MNT, GEAR BOX |
| 20 | 1 | 194537 | PLT, NUT |
| 19 | 1 | 194536 | BKT, TENSIONER |
| 18 | 1 | 194527 | MAIN DRIVE SHAFT |
| 17 | 1 | 194526 | SHAFT, MAIN DRIVE |
| 16 | 1 | 193168 | SPROCKET, SPECIAL |
| 15 | 1 | 193167 | SHAFT, DRIVE, MAIN |
| 14 | 1 | 193166 | SPROCKET, SPECIAL |
| 13 | 1 | 191136 | BRKT, IDLER, INFEED, & FLIGHT BAR |
| 12 | 1 | 191121 | JACK SHAFT, 1-1/4 DIA |
| 11 | 2 | 187523 | SPACER |
| 10 | 1 | 187514 | SPKT WITH POWER LOCK |
| 9 | 1 | 187506 | SPROCKET, SPECIAL |
| 8 | 1 | 187505 | SPROCKET, SPECIAL |
| 7 | 1 | 135622 | CPLG, DISC SINGLE FLEX, 1.625 X 1.375 |
| 6 | 1 | 129863-001 | SPACER, IDLER, 2 1/2 |
| 5 | 1 | 127921 | SPKT, 50B28, MOD, 1.250 BORE |
| 4 | 4 | 113061 | SPCR MTG GEAR BOX |
| 3 | 1 | 108225 | DRIVEN, SPROCKET |
| 2 | 1 | 108224 | DRIVER, SPROCKET |
| 1 | 2 | 107917 | SPKT, 50B20, MOD, 1.250 BORE |
| ITM | QTY | PART NUM | DESCRIPTION |

BILL OF MATERIALS

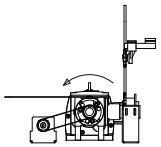

SECTION A-A

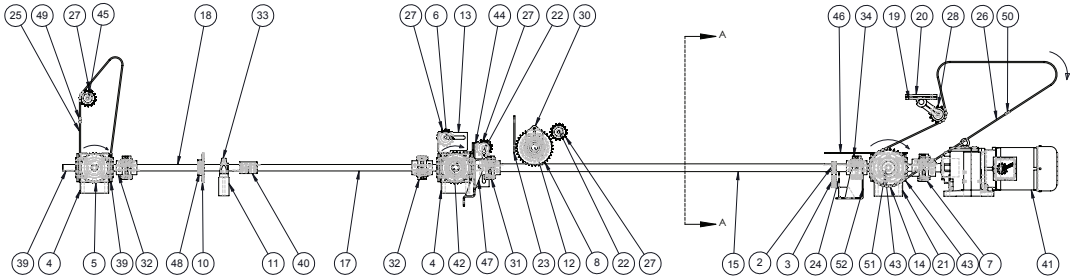


| | | | | |
|---|---|---|---|---|
| 294624-001 | LH, OPPOSITE | 221623-002 | 272049-001 | 272050 |
| 294624 | RH, AS SHOWN | 221623-001 | 272049 | 272050-001 |
| ASSY No. | NOTE | ITEM 44 | ITEM 47 | ITEM 48 |

ARPAC
9511 WEST RIVER ST.
SCHILLER PARK, IL 60176

UNLESS OTHERWISE SPECIFIED ALL DIMENSIONAL TOLERANCES:
FRACTIONS ± 1/64
TWO (2) DECIMALS ± 0.010
THREE (3) DECIMALS ± 0.005
ANGLES ± 0.5°

| | | | | | |
|---|---|---|---|---|---|
| DRAWN: 11/2/2012 | BY: SR | SCALE: 1:12 | SIZE: D | | |
| RELEASED: 11/2/2012 | FILENAME: 294624 | APPROVED BY: SRA | | | |

DESCRIPTION:
ASSY, MAIN DRIVE

DRAWING NUMBER:
294624

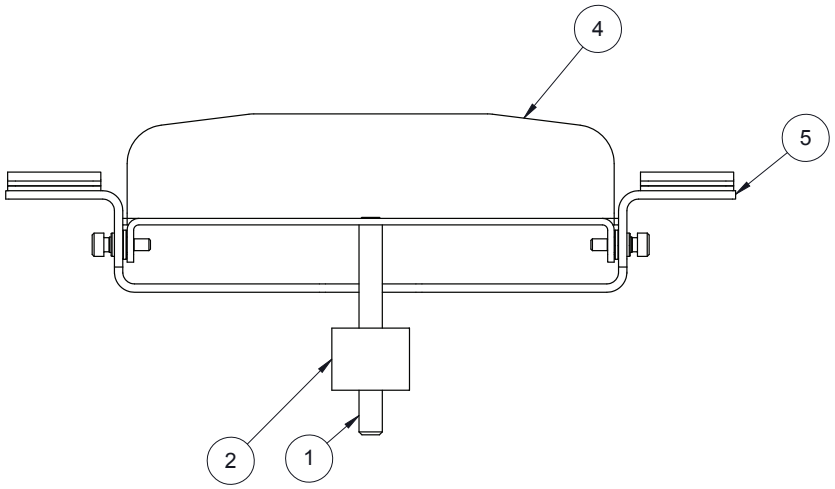


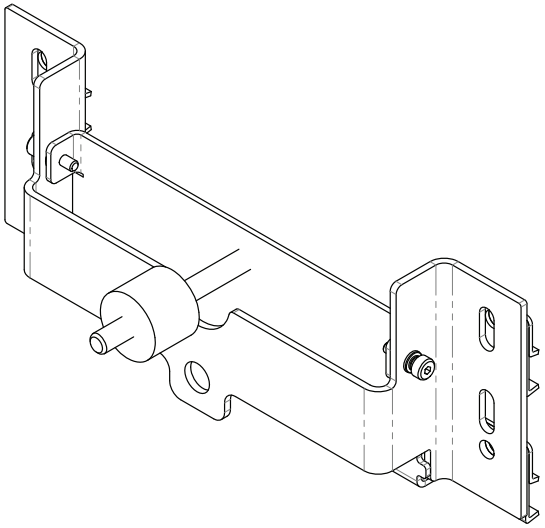

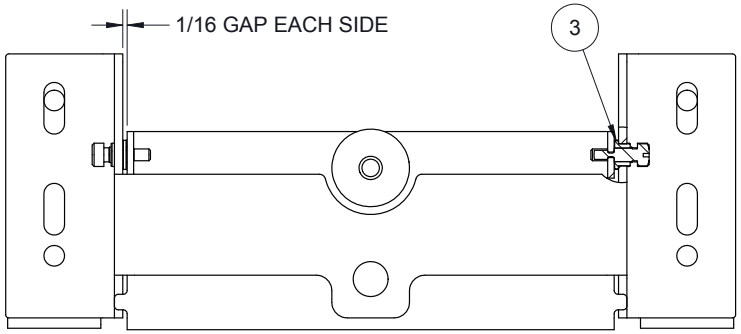


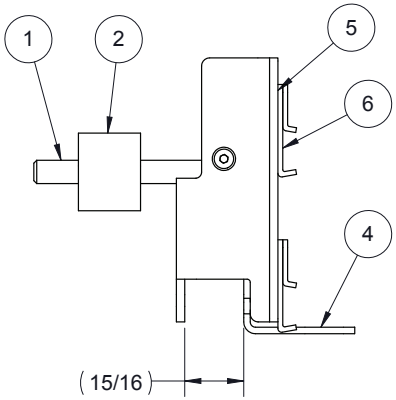


| ITM | QTY | PART NUM | DESCRIPTION |
|---|---|---|---|
| 6 | 4 | 801359 | CLAMP, RAIL, SINGLE, 1.5 LG, SS, ROUND HOLE |
| 5 | 1 | 323269 | BRKT, FRAME, PRD DTCTR, ACCUM, ADJ |
| 4 | 1 | 291031 | BRACKET, PROD DETECTOR, ACCUM |
| 3 | 2 | 800424 | BUSH, OILITE, FLG, 0.252 X 0.3775 X 1/4, 15/32 OD X 1/16 THK FLG |
| 2 | 1 | 107147 | WEIGHT, COUNTER |
| 1 | 1 | 107149 | SHAFT, WEIGHT, COUNTER |

BILL OF MATERIALS

ARPAC
9511 WEST RIVER ST.
SCHILLER PARK, IL 60176

UNLESS OTHERWISE SPECIFIED
ALL DIMENSIONAL TOLERANCES:

| | |
|---|---|
| FRACTIONS | ± 1/64 |
| TWO (2) DECIMALS | ± 0.010 |
| THREE (3) DECIMALS | ± 0.005 |
| ANGLES | ± 0.5° |

| | | | | | | | |
|---|---|---|---|---|---|---|---|
| DRAWN: | 11/8/2012 | BY: | SR | SCALE: | 1:2 | SIZE: | B |
| RELEASED: | 11/8/2012 | FILENAME: | 323268 | APPROVED BY: | SRA | | |

DESCRIPTION:
ASSY, PRODUCT DETECTOR, ACCUMULATION, ADJ

DRAWING NUMBER:
323268

| REVISIONS | | | |
|---|---|---|---|
| RV | DATE | BY | DESCRIPTION |
| A | 3/9/2018 | SRA | ADDED NOTES AND CHAINS TO VIEWS |
| B | 10/14/2021 | SRA | NUT 800290-090 WAS 800290-061 |

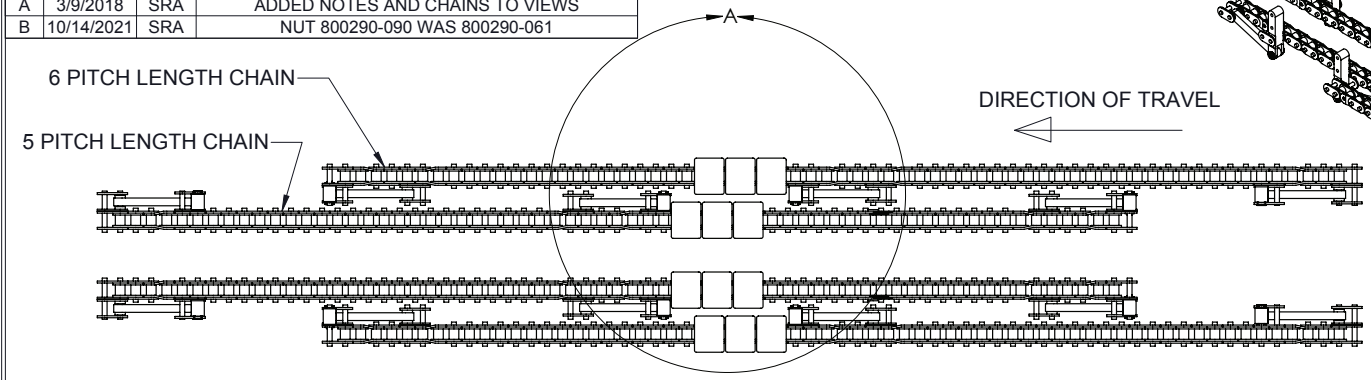


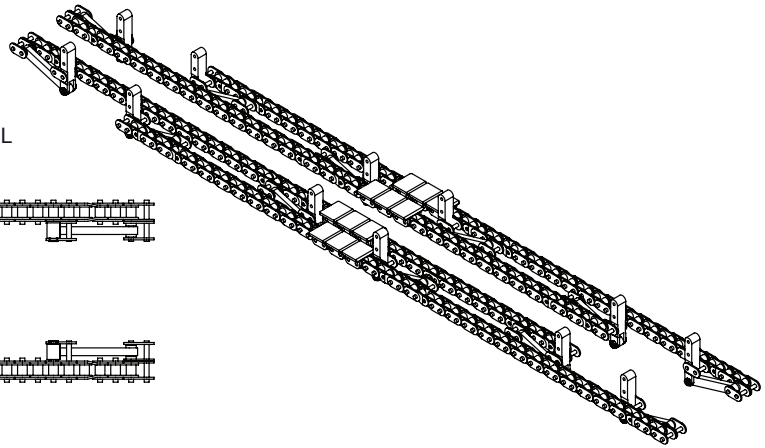

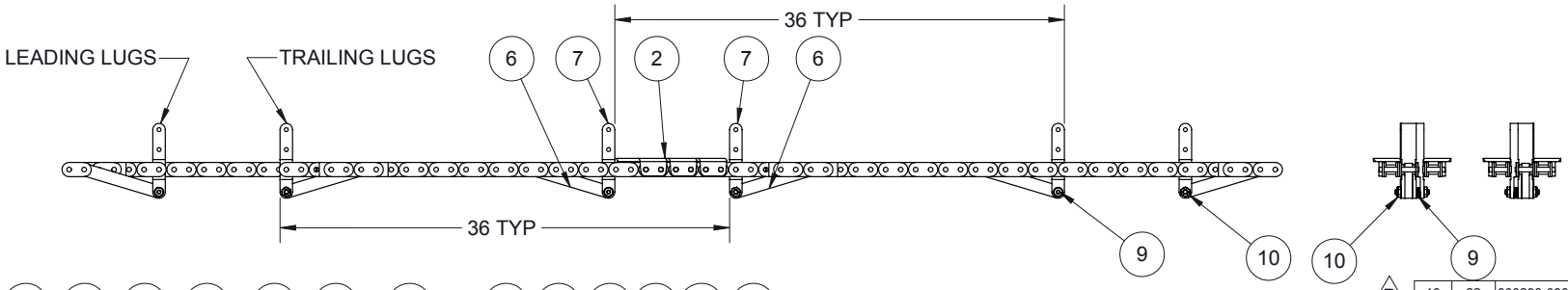


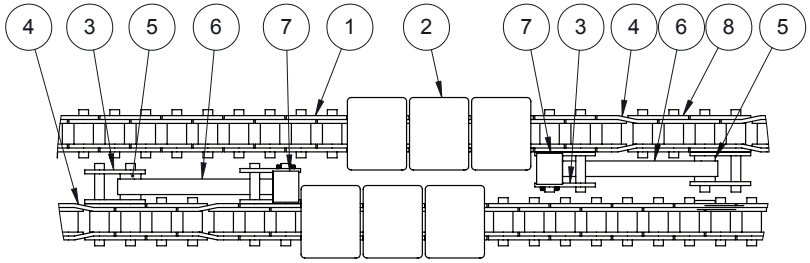


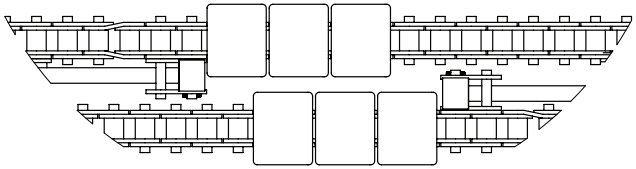

DETAIL A
SCALE 1 : 3

ASSEMBLE 4 CHAINS. TWO CHAINS INCLUDE 6 PITCH LENGTHS FOR A TOTAL CHAIN LENGTH OF 216". THE OTHER TWO CHAINS INCLUDE 5 PITCH LENGTHS FOR A TOTAL LENGTH OF 180".

NOTE: APPLY BLUE LOCTITE THREAD LOCKING ADHESIVE TO THREADS OF SHOULDER BOLTS BEFORE ATTACHING NUTS.

B

| ITM | QTY | PART NUM | DESCRIPTION |
|---|---|---|---|
| 10 | 22 | 800290-090 | FSNR, NUT, HEX, 1/4-20, JAM, FINISH |
| 9 | 22 | 800322-002 | FSNR, BOLT, SHLDR, 5/16 DIA X 1/2 LG, SS |
| 8 | 22 | 800516 | LINK, CONN, #60 |
| 7 | 22 | 246329 | LUG, FORMING, TRAY |
| 6 | 22 | 246330 | ARM, CONTROL, LUG |
| 5 | 88 | 836856 | SPACER, NYLON, 1/8" LG, FOR 1/4" SCR |
| 4 | 44 | 800519 | LINK, CONN, #60, OFFSET |
| 3 | 44 | 836863 | CHAIN, RLR, LINK CONN, #60 DOUBLE, CLIP |
| 2 | 66 | 802579-002 | FLIGHT, PLASTIC, 1.75 W, UNI 863 |
| 1 | 66 | 802579-001 | BASE CHAIN 863 |

BILL OF MATERIALS

ARPAC
9511 WEST RIVER ST.
SCHILLER PARK, IL 60176

UNLESS OTHERWISE SPECIFIED
ALL DIMENSIONAL TOLERANCES:

| | |
|---|---|
| FRACTIONS | ± 1/64 |
| TWO (2) DECIMALS | ± 0.010 |
| THREE (3) DECIMALS | ± 0.005 |
| ANGLES | ± 0.5° |

| | | | |
|---|---|---|---|
| DRAWN: 12/23/2016 | BY: HG | SCALE: 1:6 | SIZE: B |
| RELEASED: | FILENAME: 328585 | APPROVED BY: | |

DESCRIPTION: ASSY, CHAIN, LUG

DRAWING NUMBER: 328585

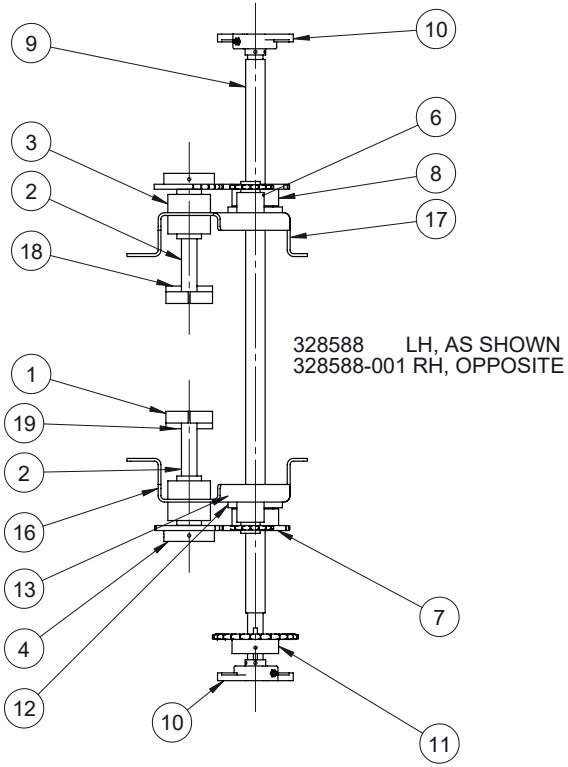


328588 LH, AS SHOWN
328588-001 RH, OPPOSITE

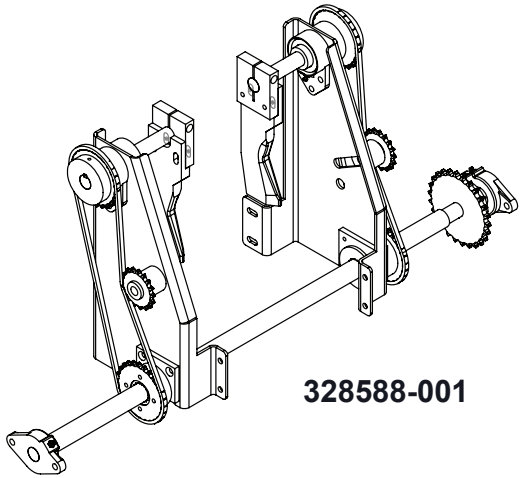

**328588-001**

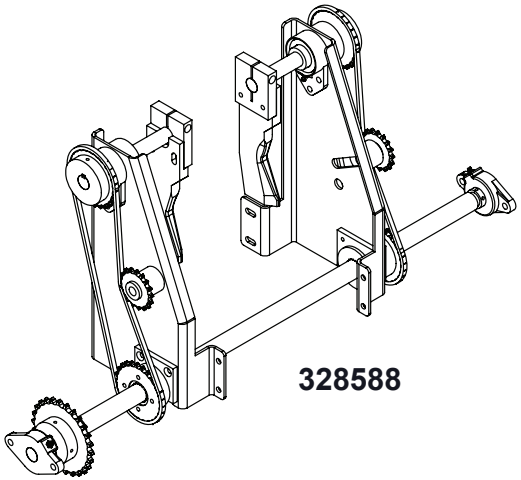

**328588**

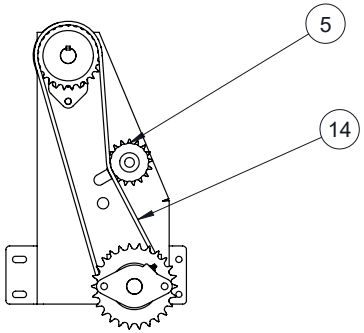


LINK, CONN #40 NOT SHOWN

| ITM | 328588/301 QTY. | PART NUM | DESCRIPTION |
|---|---|---|---|
| 19 | 1 | 104832-002 | ROTARY ARM |
| 18 | 1 | 104832-001 | ROTARY ARM |
| 17 | 1 | 328587-001 | MNT, ROTARY FOLDER |
| 16 | 1 | 328587 | MNT, ROTARY FOLDER |
| 15 | 2 | 800502 | LINK, CONN, #40 |
| 14 | 9 | 800462 | CHAIN, RLR, #40, RLR RVT |
| 13 | 2 | 190795 | PLT, WEAR, ROTARY SLEEVE |
| 12 | 2 | 190794 | PLT, WEAR, ROTARY SLEEVE |
| 11 | 1 | 104858 | 50B26 SPROCKET, MOD, 1 BORE TS60 |
| 10 | 2 | 827116 | BRG, FLG, 1 ID, 2-BOLT, 3.89 BOLT CNTRS |
| 9 | 1 | 133802 | ROTARY FOLDER DRIVE SHAFT |
| 8 | 2 | 275921 | ROTARY SPLINE SLEEVE |
| 7 | 2 | 104857 | 40A26, SPROCKET, MOD, 1 3/4 BORE |
| 6 | 2 | 114201-003 | SPACER, IDL SPKT |
| 5 | 2 | 800906 | SPKT, 40BB17H, IDLER, 0.625 ID |
| 4 | 2 | 124817 | SPKT, 40B26, 1.00 BORE |
| 3 | 4 | 837218 | BRG, FLG, 1 ID, 3-BOLT, STD DUTY |
| 2 | 2 | 319501 | SHAFT, FOLDER, FLAP, ROTARY |
| 1 | 2 | 104831 | ROTARY ARM MOUNTING |

BILL OF MATERIALS

ARPAC
9511 WEST RIVER ST.
SCHILLER PARK, IL 60176

UNLESS OTHERWISE SPECIFIED
ALL DIMENSIONAL TOLERANCES:

| | |
|---|---|
| FRACTIONS | ± 1/64 |
| TWO (2) DECIMALS | ± 0.010 |
| THREE (3) DECIMALS | ± 0.005 |
| ANGLES | ± 0.5° |

| | | | | | |
|---|---|---|---|---|---|
| DRAWN: 12/27/2013 | BY: | SRA | SCALE: | 1:8 | SIZE: B |
| RELEASED: 12/27/2013 | FILENAME: | 328588 | APPROVED BY: | SRA | |

DESCRIPTION:
ASSY, FLAP FOLDER, ROTARY

DRAWING NUMBER:
328588

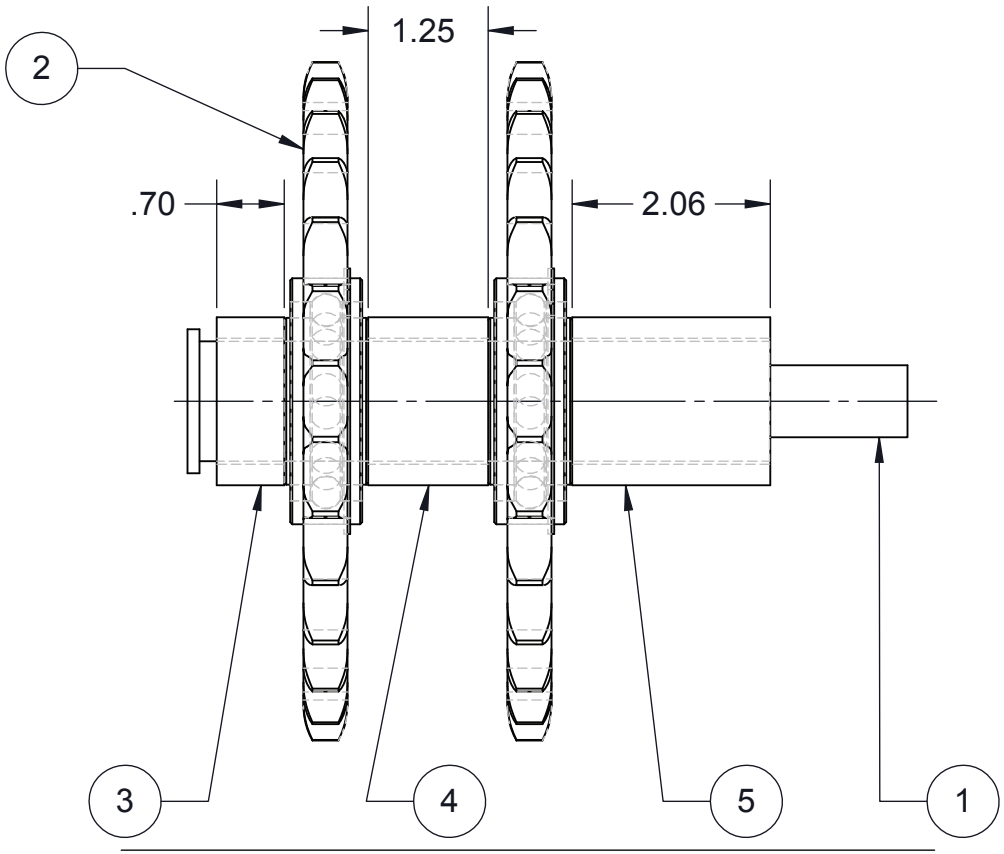


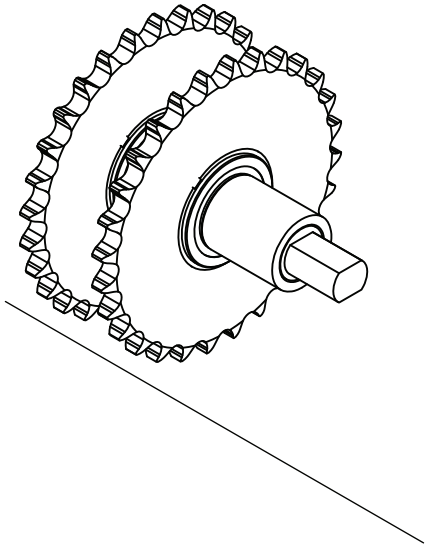

| ITM | QTY | PART NUM | DESCRIPTION |
|---|---|---|---|
| 5 | 1 | 190809-004 | SPACER |
| 4 | 1 | 190809-010 | SPACER |
| 3 | 1 | 190809-011 | SPACER |
| 2 | 2 | 112726 | SPROCKET - MODIFIED |
| 1 | 1 | 220971 | SHAFT, IDLER, COMPRESSION SECTION |

BILL OF MATERIALS

ARPAC
9511 WEST RIVER ST.
SCHILLER PARK, IL 60176

UNLESS OTHERWISE SPECIFIED ALL DIMENSIONAL TOLERANCES:

| | |
|---|---|
| FRACTIONS | ± 1/64 |
| TWO (2) DECIMALS | ± 0.010 |
| THREE (3) DECIMALS | ± 0.005 |
| ANGLES | ± 0.5° |

| | | | | | | | |
|---|---|---|---|---|---|---|---|
| DRAWN: | 05/24/2001 | BY: | TTR | SCALE: | 0.5:1 | SIZE: | A |
| RELEASED: | 05/24/2001 | FILENAME: | 328589 | APPROVED BY: | TTR | | |

DESCRIPTION:
ASSY, IDLER, COMPRESSION SECTION

DRAWING NUMBER:
328589

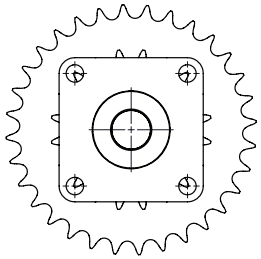

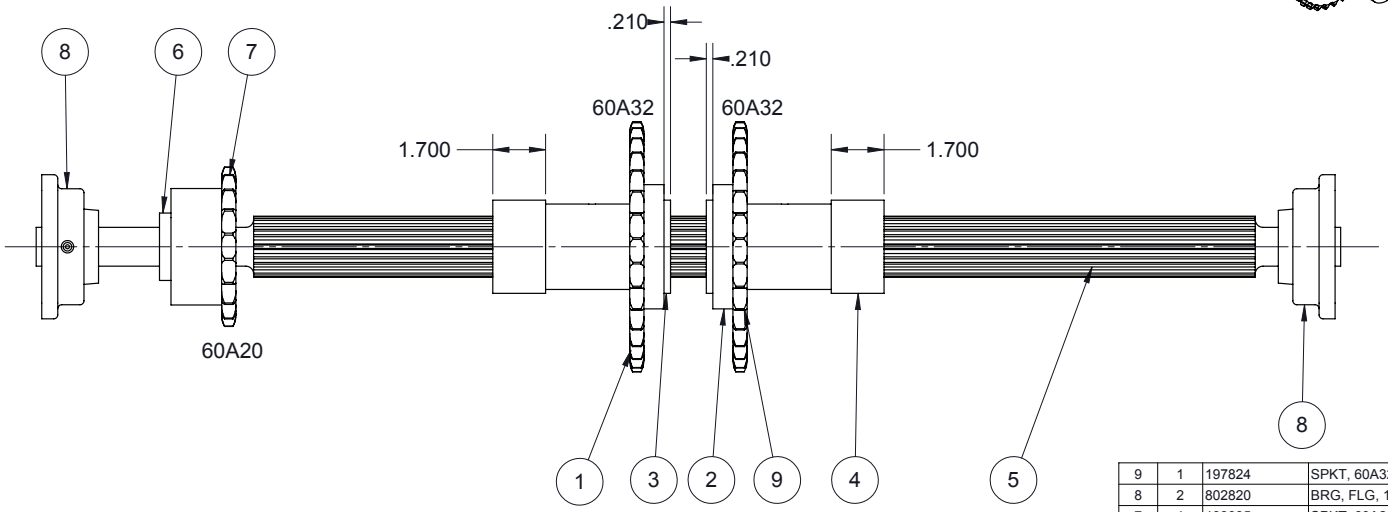


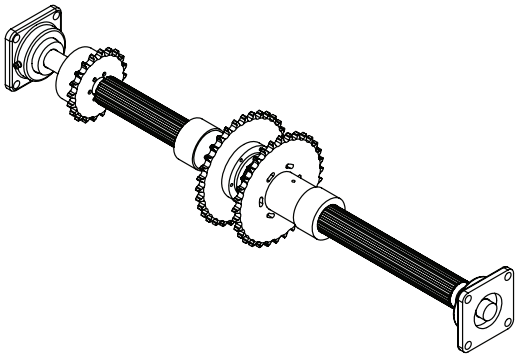

| ITM | QTY | PART NUM | DESCRIPTION |
|---|---|---|---|
| 9 | 1 | 197824 | SPKT, 60A32, COMP, DRIVE |
| 8 | 2 | 802820 | BRG, FLG, 1-1/4 ID, 4-BOLT LIGHT-DUTY |
| 7 | 1 | 193095 | SPKT, 60A20, MOD, 1.250 BORE |
| 6 | 1 | 800610 | CPLG, PHASE-LOCK 1-1/4 BORE |
| 5 | 1 | 195443 | SHAFT, SPLINE, LEAD CHAIN DRV |
| 4 | 2 | 190799-007 | SPKT, CARRIER SPACER |
| 3 | 2 | 190799-008 | SPKT, CARRIER SPACER |
| 2 | 2 | 108850-000C | CONVEYOR DR. SPRKT CARRIER |
| 1 | 1 | 197826 | SPKT, 60A32, COMP, DRIVE |

BILL OF MATERIALS

ARPAC
9511 WEST RIVER ST.
SCHILLER PARK, IL 60176

UNLESS OTHERWISE SPECIFIED
ALL DIMENSIONAL TOLERANCES:

| | |
|---|---|
| FRACTIONS | ± 1/64 |
| TWO (2) DECIMALS | ± 0.010 |
| THREE (3) DECIMALS | ± 0.005 |
| ANGLES | ± 0.5° |

| | | | | | |
|---|---|---|---|---|---|
| DRAWN: 10/02/2001 | BY: | TTR | SCALE: 0.25:1 | SIZE: B | |
| RELEASED: | FILENAME: | 328590 | APPROVED BY: | TTR | |

DESCRIPTION:
ASSY, DRIVE, SPLINE SHAFT, LEAD

DRAWING NUMBER:
328590

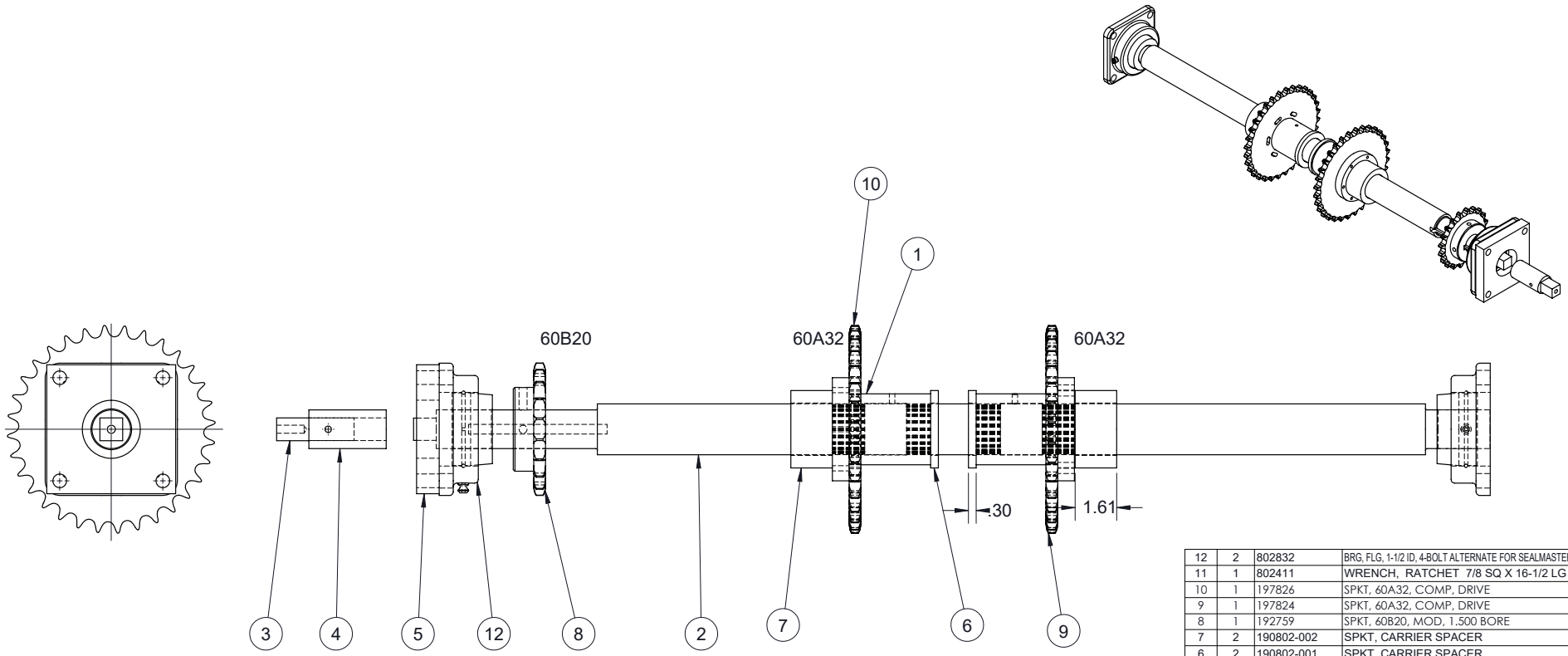


| ITM | QTY | PART NUM | DESCRIPTION |
|---|---|---|---|
| 12 | 2 | 802832 | BRG, FLG, 1-1/2 ID, 4-BOLT ALTERNATE FOR SEALMASTER |
| 11 | 1 | 802411 | WRENCH, RATCHET 7/8 SQ X 16-1/2 LG |
| 10 | 1 | 197826 | SPKT, 60A32, COMP, DRIVE |
| 9 | 1 | 197824 | SPKT, 60A32, COMP, DRIVE |
| 8 | 1 | 192759 | SPKT, 60B20, MOD, 1.500 BORE |
| 7 | 2 | 190802-002 | SPKT, CARRIER SPACER |
| 6 | 2 | 190802-001 | SPKT, CARRIER SPACER |
| 5 | 1 | 187303 | SPACER, 4 BOLT, BEARING |
| 4 | 1 | 135005 | SLEEVE, 7/8 SQ. |
| 3 | 1 | 134996 | SHAFT, 7/8 SQ. |
| 2 | 1 | 133803 | SHAFT, SPLINE, W/HANDLE |
| 1 | 2 | 108850-000C | CONVEYOR DR. SPRKT CARRIER |

BILL OF MATERIALS

ARPAC
9511 WEST RIVER ST.
SCHILLER PARK, IL 60176

UNLESS OTHERWISE SPECIFIED ALL DIMENSIONAL TOLERANCES:
FRACTIONS ± 1/64
TWO (2) DECIMALS ± 0.010
THREE (3) DECIMALS ± 0.005
ANGLES ± 0.5°

| | | | |
|---|---|---|---|
| DRAWN: 10/02/2001 | BY: TTR | SCALE: 0.25:1 | SIZE: B |
| RELEASED: | FILENAME: 328591 | APPROVED BY: TTR | |

DESCRIPTION: ASSY, DRIVE, SPLINE SHAFT, TRAIL

DRAWING NUMBER: 328591

ITEM 11 NOT SHOWN

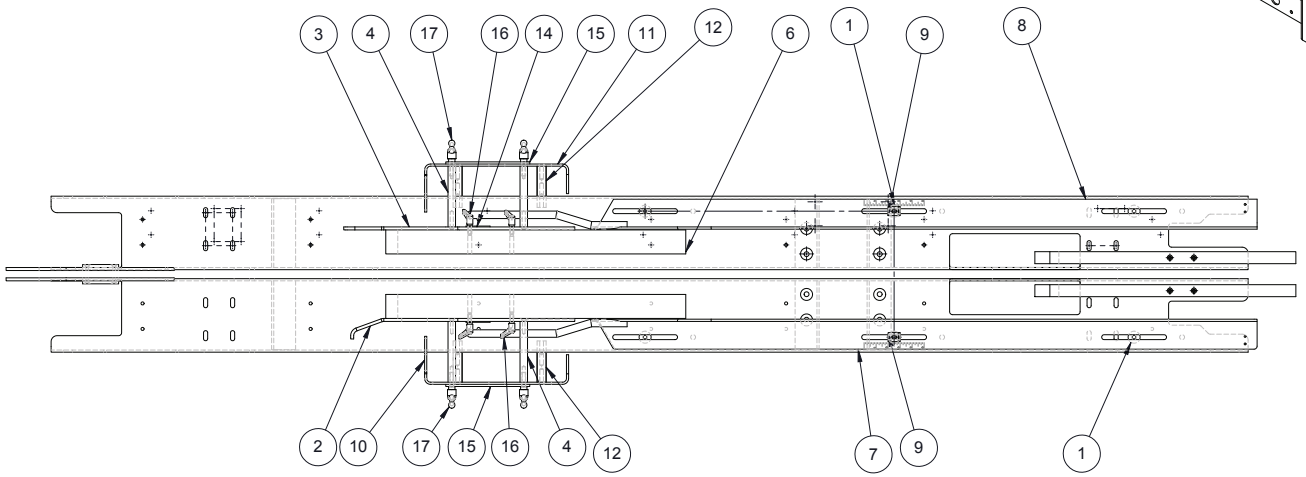


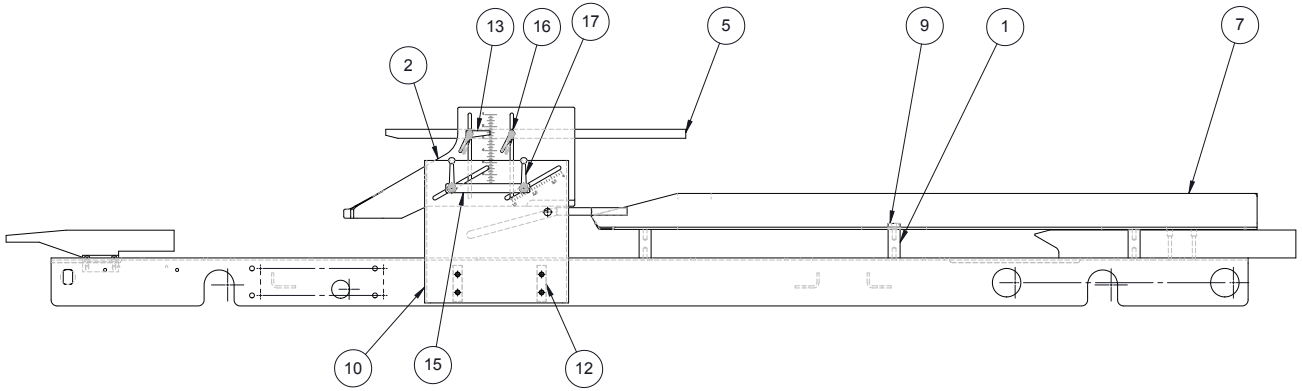


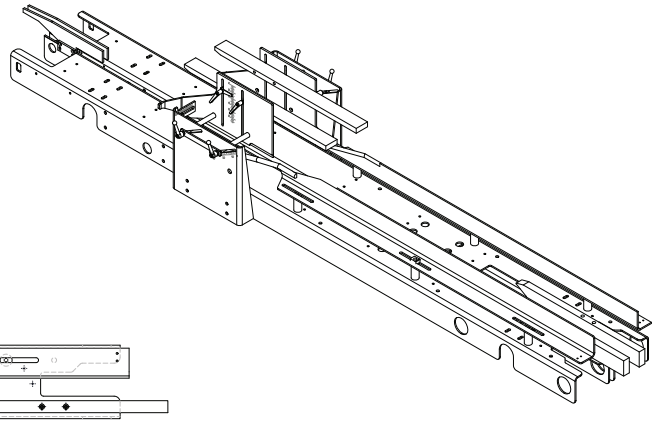

| ITM | QTY | PART NUM | DESCRIPTION |
|---|---|---|---|
| 17 | 4 | 806459 | HDL, ADJ, ZINC, 2-1/2 LG 5/16-18 X 1.18 STUD |
| 16 | 4 | 802676-001 | HDL, ADJ, ZINC, 1.77 LG 1/4-20 X .78 STUD |
| 15 | 2 | 276478 | PLT, INDICATOR |
| 14 | 1 | 241699-001 | POINTER, SCALE, 9/32 RH |
| 13 | 1 | 241699 | POINTER, SCALE, 9/32 |
| 12 | 4 | 328586 | PLT, MTG, SIDE |
| 11 | 1 | 237923-002 | MNT, GLUE GUN & MINOR PLOW |
| 10 | 1 | 237923-001 | MNT, GLUE GUN & MINOR PLOW |
| 9 | 2 | 221935 | KEY, SIDE ANGLE |
| 8 | 1 | 332572-001 | WLDMT, COMPRESSION, SIDE |
| 7 | 1 | 332572 | WLDMT, COMPRESSION, SIDE |
| 6 | 1 | 221628-002 | HOLD DOWN, PRODUCT |
| 5 | 1 | 221628-001 | HOLD DOWN, PRODUCT |
| 4 | 4 | 190789 | ROD, PLOW, 5.06 LG |
| 3 | 1 | 292127-002 | PLOW, MINOR, LH |
| 2 | 1 | 292127-001 | PLOW, MINOR, RH |
| 1 | 6 | 144124-142 | SHAFT, 1.000, TAPPED |

BILL OF MATERIALS

ARPAC
9511 WEST RIVER ST.
SCHILLER PARK, IL 60176

UNLESS OTHERWISE SPECIFIED
ALL DIMENSIONAL TOLERANCES:

| | |
|---|---|
| FRACTIONS | ± 1/64 |
| TWO (2) DECIMALS | ± 0.010 |
| THREE (3) DECIMALS | ± 0.005 |
| ANGLES | ± 0.5° |

| | | | |
|---|---|---|---|
| DRAWN: 09/02/2015 | BY: SRA | SCALE: 0.125:1 | SIZE: C |
| RELEASED: | FILENAME: 328592 | APPROVED BY: SRA | |

DESCRIPTION: ASSY, FORMING, TRAY

DRAWING NUMBER: 328592

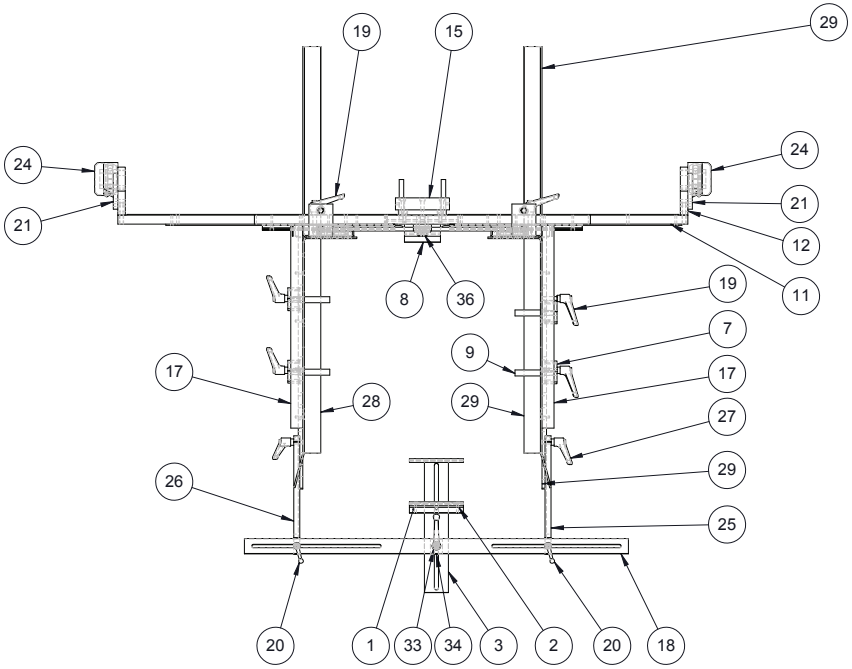


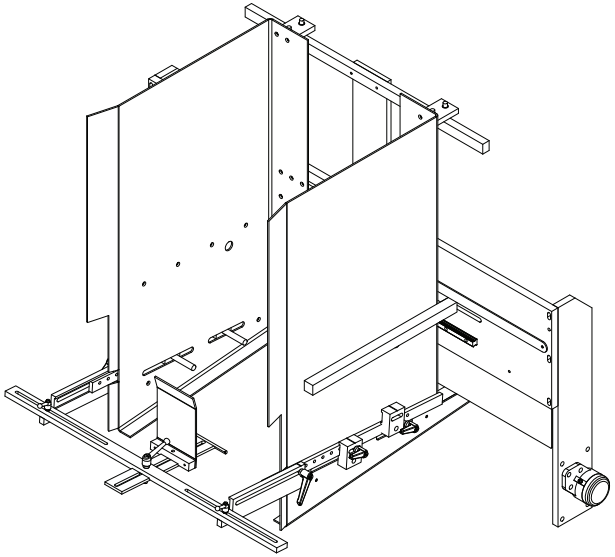

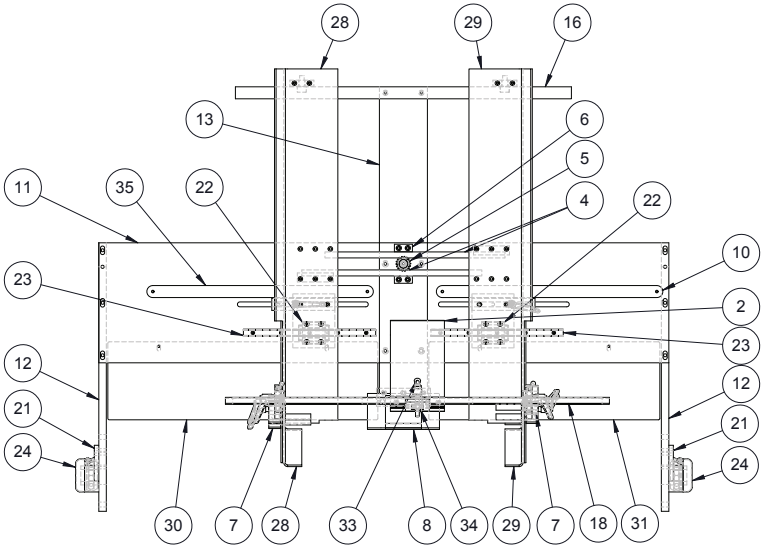


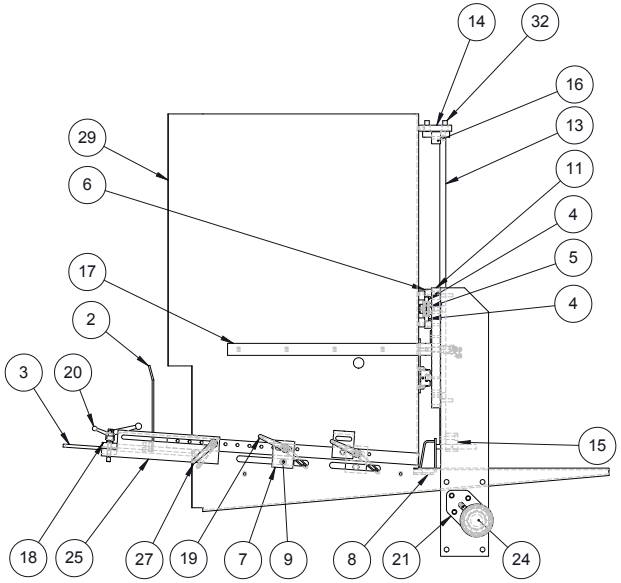


| | ITM | QTY | PART NUM | DESCRIPTION |
|---|---|---|---|---|
| A | 36 | 1 | 800324-007 | SHOULDER BOLT |
| A | 35 | 1 | 221957-001 | SCALE, 17" LG, LH |
| A | 34 | 1 | 282745 | NUT, T, 5/16-18 |
| A | 33 | 1 | 802677 | HDL, ADJ, ZINC, 2.56 LG 5/16-18 X 1.57 STUD |
| | 32 | 4 | 851375 | FOLLOWER, CAM, 3/4 OD, 3/8-24 STUD, W/HEX HOLE, W/ECCENTRIC STUD |
| | 31 | 1 | 298216 | PLT, GUARD, MAGAZINE, LH SIDE |
| | 30 | 1 | 298215 | PLT, GUARD, MAGAZINE, RH SIDE |
| | 29 | 1 | 282741 | WALL, SIDE, L.H. |
| | 28 | 1 | 282740 | WALL, SIDE, RH |
| | 27 | 2 | 809385 | HDL, ADJ, ZINC, 2-1/2 LG 5/16-18 X .78 STUD |
| | 26 | 1 | 282743-002 | SUPPORT, BLANK, MAG. |
| | 25 | 1 | 282743-001 | SUPPORT,BLANK, MAG. |
| | 24 | 2 | 845246 | COVER, BREARING, CLOSE END, 1" |
| | 23 | 2 | 851378 | RAIL, GUIDE, 15MM, 280L |
| | 22 | 2 | 851377 | BLK, BRG, LINEAR, 15MM |
| | 21 | 2 | 837218 | BRG, FLG, 1 ID, 3-BOLT, STD DUTY |
| A | 20 | 2 | 810224 | HDL, ADJ, SS, 1.57 LG 1/4-20 X 1.18 STUD |
| | 19 | 6 | 823126 | HDL, ADJ, ZINC, 2-1/2 LG 5/16-18 X 1.26 STUD |
| | 18 | 1 | 298272 | SUPPORT, REAR, MAGAZINE |
| | 17 | 2 | 282742 | WLDMT, SPACER |
| | 16 | 1 | 282731 | BAR |
| | 15 | 1 | 282730 | FRONT SUPPORT HOLDER |
| | 14 | 2 | 328783 | PLT, MTG, CAM FOLLOWER |
| | 13 | 1 | 282728 | PLATE, BACK |
| | 12 | 2 | 282727 | BAR, MTG, HOPPER |
| | 11 | 1 | 282726 | LH MACH |
| A | 10 | 1 | 221957 | SCALE, 17" LG, RH |
| | 9 | 4 | 186703 | PIN, SUPPORT ,ROD |
| | 8 | 1 | 291898 | WLDMT, SUPPORT, BLANK |
| | 7 | 4 | 141335 | BLOCK |
| | 6 | 2 | 141330 | RACK RETAINER |
| | 5 | 1 | 141329 | GEAR, SPECIAL |
| | 4 | 2 | 141328 | RACK WELDMENT |
| | 3 | 1 | 122551 | SIDE, BASE, BLANK |
| | 2 | 1 | 122539 | REAR, BLANK, SUPPORT |
| | 1 | 1 | 122524 | MTG, PLATE, SUPPORT, BLANK |

BILL OF MATERIALS

| REV | DATE | BY | NOTE |
|---|---|---|---|
| A | 3/31/2021 | GMA | ADDED QTY 1 OF 800324-007, 282745, 802677, 221957-001. REMOVED QTY 1 OF 221957 &810224 |

REVISIONS

ARPAC
9511 WEST RIVER ST.
SCHILLER PARK, IL 60176

UNLESS OTHERWISE SPECIFIED ALL DIMENSIONAL TOLERANCES:

| | |
|---|---|
| FRACTIONS | ± 1/64 |
| TWO (2) DECIMALS | ± 0.010 |
| THREE (3) DECIMALS | ± 0.005 |
| ANGLES | ± 0.5° |

| | | | |
|---|---|---|---|
| DRAWN: 11/3/2012 | BY: SR | SCALE: 1:8 | SIZE: C |
| RELEASED: 11/3/2012 | FILENAME: 328784 | APPROVED BY: SRA | |

DESCRIPTION: ASSY, HOPPER, RH MACH

DRAWING NUMBER: 328784

ARPAC C SIZE FORMAT R5

| BILL OF MATERIALS | | | |
|---|---|---|---|
| ITEM | QTY | NUMBER | DESCRIPTION |
| 1 | 1 | 345485 | ASSY, RAIL |
| 2 | 1 | 328592 | ASSY, FORMING, TRAY |
| 3 | 1 | 328588 | ASSY, FLAP FOLDER, ROTARY |
| 4 | 1 | 328590 | ASSY, DRIVE, SPLINE SHAFT, LEAD |
| 5 | 1 | 328591-001 | ASSY, DRIVE, SPLINE SHAFT, TRAIL |
| 6 | 1 | 220975 | ASSY, SCREW, ADJ. RH |
| 7 | 2 | 328589 | ASSY, IDLER, COMPRESSION SECTION |
| 8 | 1 | 345486 | ASSY, CHAIN SUPPORT |
| 9 | 1 | 291515 | ASSY, GUIDE, SIDE, PRODUCT |
| 10 | 1 | 328585 | ASSY, CHAIN, LUG |

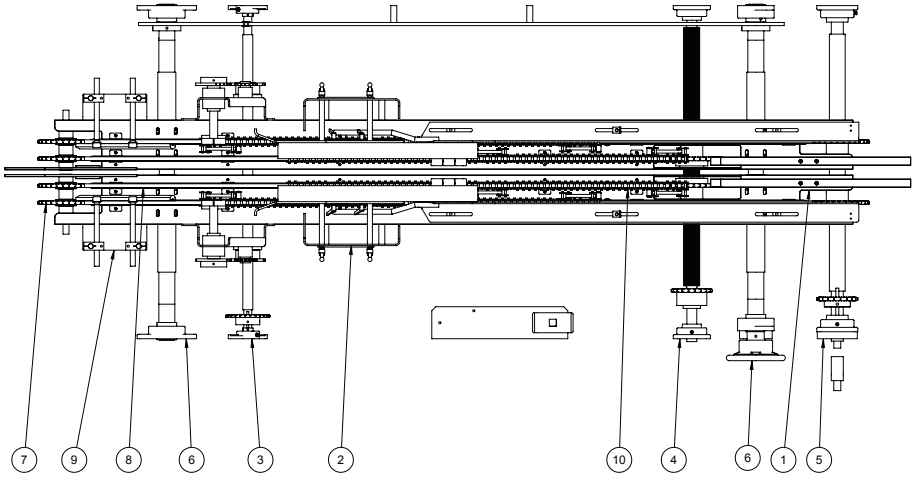


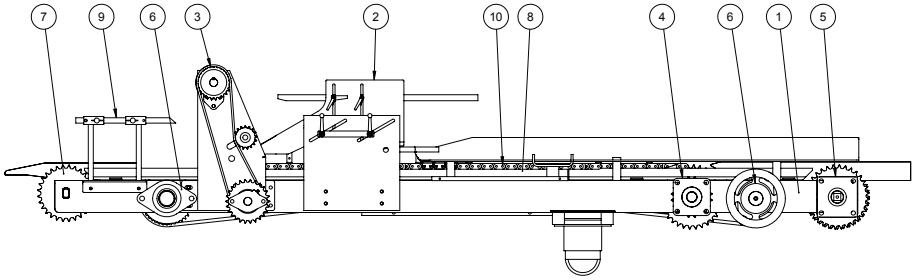


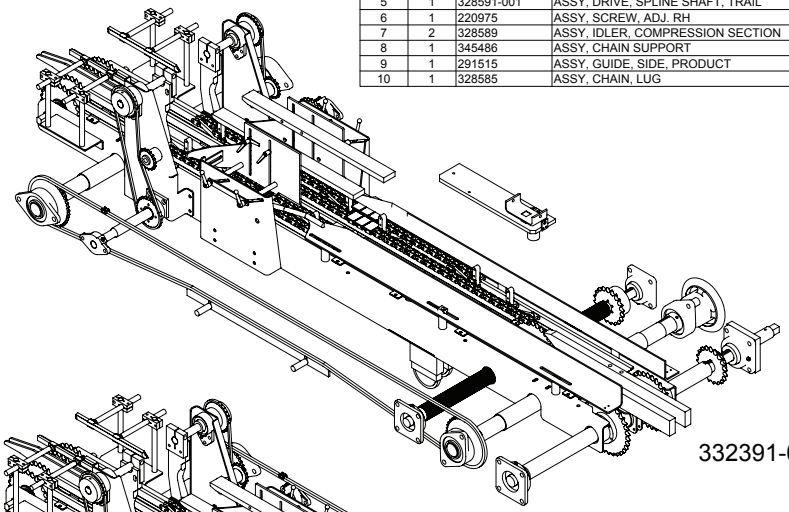

332391-001

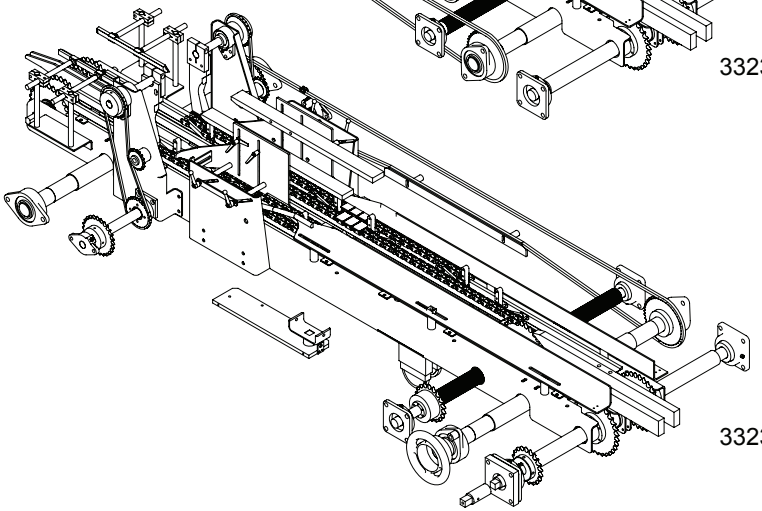

332391

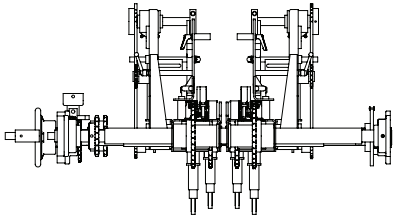

| REV | DATE | BY | NOTE |
|---|---|---|---|
| REVISIONS | | | |

NOTES
- INTERPRET PER ASME Y14.5M-1994.
- DIMENSIONS ARE IN INCHES [mm].
- DIMENSIONS IN PARENTHESES FOR REFERENCE ONLY.
- BREAK SHARP EDGES AND CORNERS.
- PROPRIETARY NOTICE: THIS INFORMATION IS THE PROPERTY OF ARPAC LLC AND SHALL NOT BE USED FOR ANY PURPOSE OTHER THAN THAT FOR WHICH IT WAS OBTAINED.
- CREATED IN SOLIDWORKS 2013.

CREATED IN SOLIDWORKS 2013

ARPAC A DURAVANT COMPANY
9555 W. Irving Park Rd.
Schiller Park, IL 60176
www.arpac.com

| | | |
|---|---|---|
| MODEL | FILE \ CONFIG | 332391\332391 |
| | SIMILAR TO | -- |
| | DATE CREATED | Wednesday, March 16, 2011 1:34:00 AM |
| | DATE UPDATED | Monday, December 30, 2019 4:52:06 PM |
| | UPDATED BY | sarcher |
| DRAFT | DATE CREATED | Monday, March 27, 2017 4:24:14 PM |
| | DATE UPDATED | Friday, August 28, 2020 4:08:28 PM |
| | UPDATED BY | sarcher |

| | |
|---|---|
| SIZE | C |
| SCALE | 1:12 |
| 3RD ANGLE | |
| UNITS | INCH |
| TOLERANCES | X/X: ±1/32<br>X.XX: ±.015<br>X.XXX: ±.005<br>ANGLES: ±1° |
| MATERIAL | SEE BILL OF MATERIALS |
| FINISH | Finish <not specified> |
| DESCRIPTION | ASSY, SECTION, COMPRESSION, TS-2000 |
| NUMBER | 332391 |

"C:\ARPAC_VAULT\Designs_CORRUGATED\TS-2300\15927\332391.slddrw" accessed Friday, August 28, 2020.

ARPAC B SIZE FORMAT R5

| BILL OF MATERIALS | | | |
|---|---|---|---|
| ITEM | QTY | NUMBER | DESCRIPTION |
| 1 | 2 | 283366 | PLT, MTG, ROLLER |
| 2 | 1 | 292552-001 | SHAFT, 1.000, TAPPED, 3/8-16, SS |
| 3 | 2 | 826950 | ASSY, RLR, NO-CRUSH, 6 OD, 2 WD, W/ HUB |
| 4 | 4 | 800600 | COLLAR, SHAFT, CLAMP, 1-PIECE |
| 5 | 2 | 848565 | HDL, ADJ, SS, 3.07 LG 3/8-16 X .78 STUD |

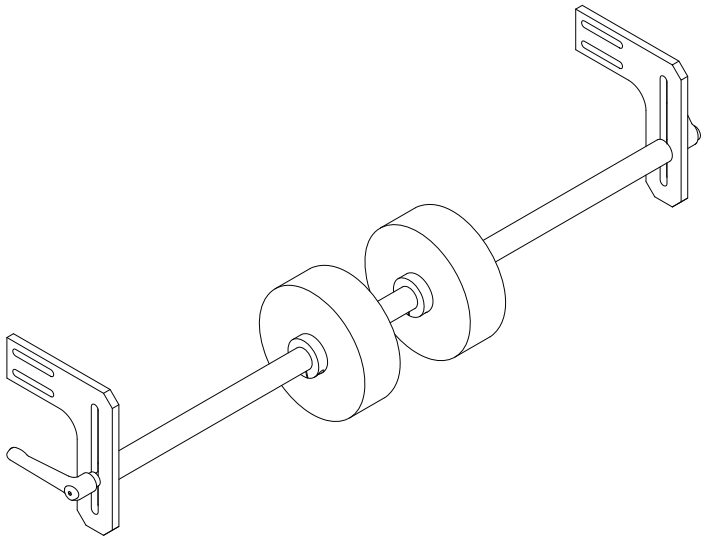

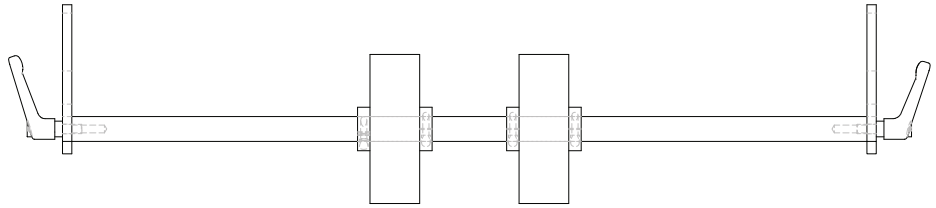

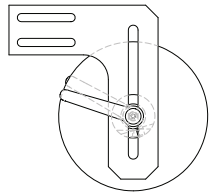

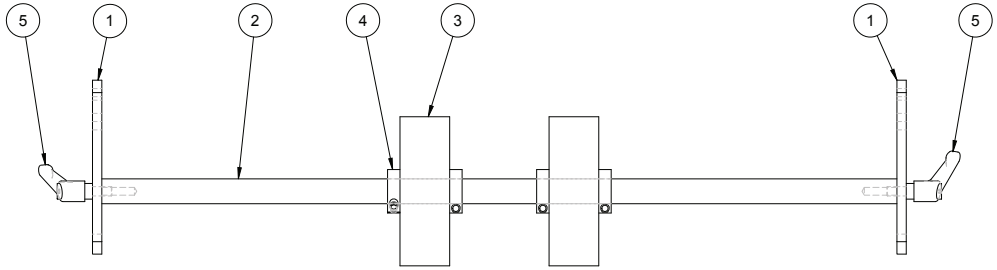


| REV | DATE | BY | NOTE |
|---|---|---|---|
| REVISIONS | | | |

NOTES
- INTERPRET PER ASME Y14.5M-1994.
- DIMENSIONS ARE IN INCHES [mm].
- DIMENSIONS IN PARENTHESES FOR REFERENCE ONLY.
- BREAK SHARP EDGES AND CORNERS.
- PROPRIETARY NOTICE: THIS INFORMATION IS THE PROPERTY OF ARPAC LLC AND SHALL NOT BE USED FOR ANY PURPOSE OTHER THAN THAT FOR WHICH IT WAS OBTAINED.
- CREATED IN SOLIDWORKS 2013.

CREATED IN SOLIDWORKS 2013

ARPAC A DURAVANT COMPANY
9555 W. Irving Park Rd.
Schiller Park, IL 60176
www.arpac.com

| | | |
|---|---|---|
| MODEL | FILE \ CONFIG | 332418\Default |
| | SIMILAR TO | -- |
| | DATE CREATED | Thursday, July 28, 2016 12:06:57 PM |
| | DATE UPDATED | Monday, April 26, 2021 1:29:13 PM |
| | UPDATED BY | Gibran.Mota |
| DRAFT | DATE CREATED | Wednesday, March 29, 2017 8:43:57 AM |
| | DATE UPDATED | Monday, April 26, 2021 1:29:14 PM |
| | UPDATED BY | Gibran.Mota |

SIZE: B
SCALE: 1:5
3RD ANGLE
UNITS: INCH
TOLERANCES
X/X: ±1/32
X.XX: ±.015
X.XXX: ±.005
ANGLES: ±1°

MATERIAL: SEE BILL OF MATERIALS
FINISH: NONE

DESCRIPTION: ASSY, ROLLER, HOLD-DOWN
NUMBER: 332418

"C:\nVenia_Vault\Designs_CORRUGATED\TS-2300\15927\332418.slddrw" accessed Monday, April 26, 2021.

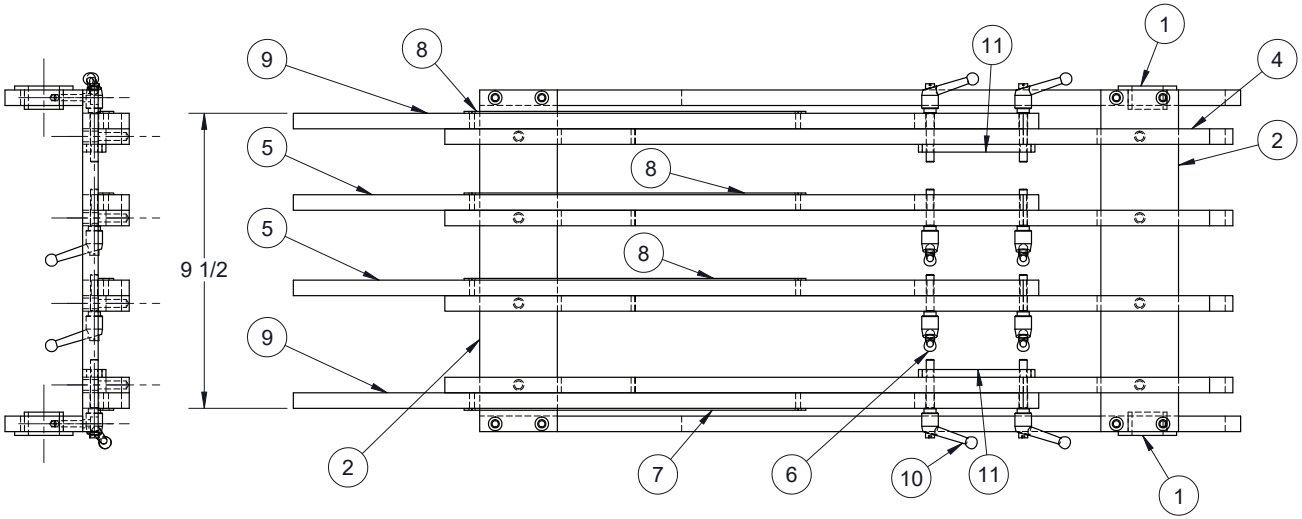


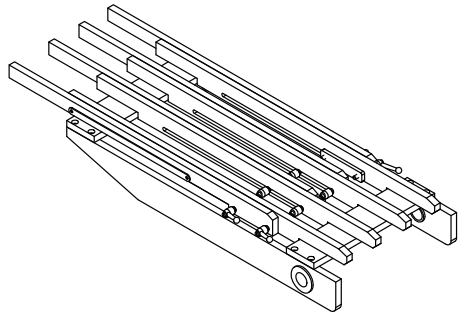

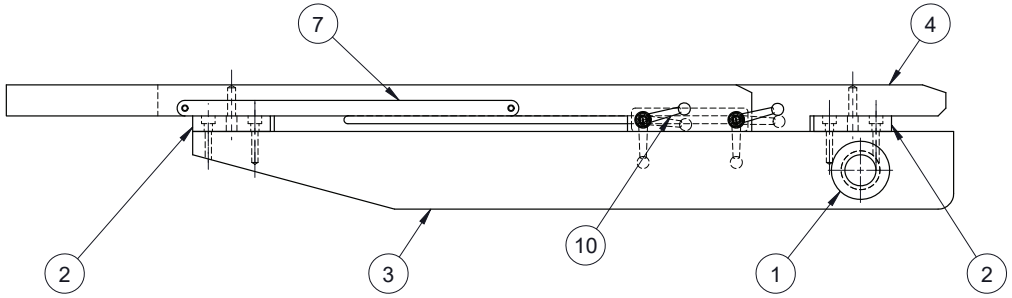


| ITM | QTY | PART NUM | DESCRIPTION |
|---|---|---|---|
| 11 | 2 | 294789 | PLT, NUT |
| 10 | 4 | 821863 | HDL, ADJ, SS, 1.57 LG 1/4-20 X 1.57 STUD |
| 9 | 2 | 294787 | BAR, TRANSFER, ADJ, OUTER |
| 8 | 3 | 298289-001 | SCALE, 10 LG, 1/2 W, LH |
| 7 | 1 | 298289 | SCALE, 10 LG, 1/2 W, RH |
| 6 | 4 | 810224 | HDL, ADJ, SS, 1.57 LG 1/4-20 X 1.18 STUD |
| 5 | 2 | 282823 | BAR, TRANSFER, ADJ |
| 4 | 4 | 282822 | BAR, TRANSFER, STATIONARY |
| 3 | 2 | 282820 | PLATE, BRIDGE, SIDE |
| 2 | 2 | 332606 | PLT, CROSS, BRIDGE |
| 1 | 2 | 800416 | BUSH, OILITE, FLG, 1.001 X 1.253 X 3/4, 1-7/8 X 1/8 THK FLG |

BILL OF MATERIALS

ARPAC
9511 WEST RIVER ST.
SCHILLER PARK, IL 60176

UNLESS OTHERWISE SPECIFIED ALL DIMENSIONAL TOLERANCES:
FRACTIONS ± 1/64
TWO (2) DECIMALS ± 0.010
THREE (3) DECIMALS ± 0.005
ANGLES ± 0.5°

DRAWN: 4/10/2017 | BY: SRA | SCALE: 1:4 | SIZE: B
RELEASED: | FILENAME: 332605 | APPROVED BY:
DESCRIPTION: ASSY, BRIDGE, MAG, EXT

DRAWING NUMBER: 332605

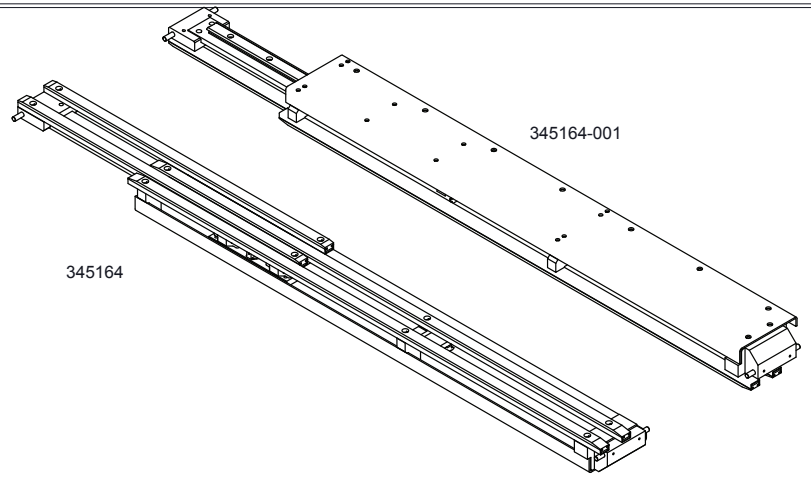


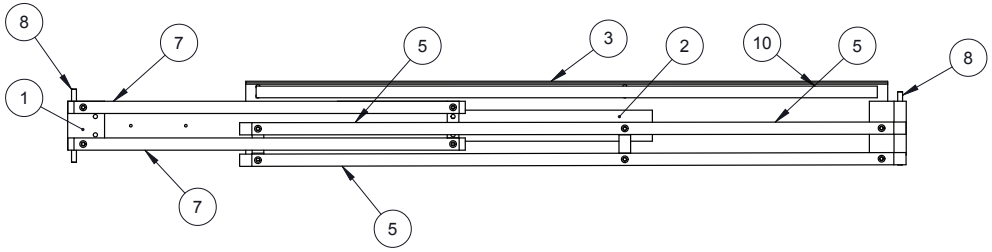


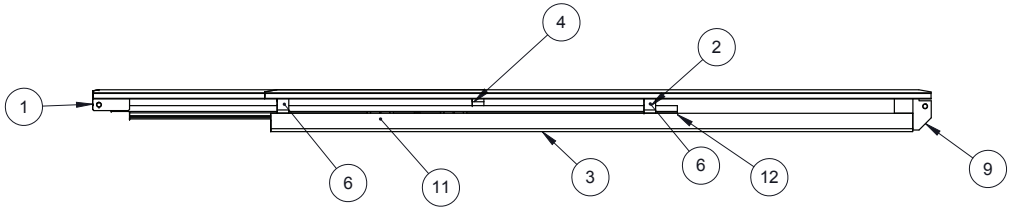


| 345164-001 | 345162-001 | 345161-001 |
|---|---|---|
| 345164 | 345162 | 345161 |
| PART NUMBER | ITEM 3 | ITEM 9 |

| ITM | QTY | PART NUM | DESCRIPTION |
|---|---|---|---|
| 12 | 1 | 828104 | SLIDE, SPACER, SS, B = 896MM OAL, C&D = 43MM |
| 11 | 1 | 828103 | SYSTEM, SLIDE, BASED, SS |
| 10 | 1 | 345163 | BAR, STIFFNER, GUIDE, DIVIDER |
| 9 | 1 | SEE TABLE | BLK, MTG, PIVOT, GUIDE, SLIDE |
| 8 | 2 | 284071 | PIN, MNT, PIVOT, GUIDE, SLIDE |
| 7 | 2 | 284069 | GUIDE, LANE, SHORT, GUIDE, SLIDE |
| 6 | 2 | 345160 | BLK, MTG, GUIDE, LONG |
| 5 | 2 | 284065 | GUIDE, LANE, LONG, GUIDE, SLIDE |
| 4 | 1 | 284064 | SUPPORT GUIDE |
| 3 | 1 | SEE TABLE | FRAME, SUPPORT, SLIDE, GUIDE, LANE |
| 2 | 1 | 284060 | GUIDE PROFILE |
| 1 | 1 | 284059 | BLK, MTG, PIVOT, GUIDE, SLIDE |

BILL OF MATERIALS

ARPAC
9511 WEST RIVER ST.
SCHILLER PARK, IL 60176

UNLESS OTHERWISE SPECIFIED
ALL DIMENSIONAL TOLERANCES:

| | |
|---|---|
| FRACTIONS | ± 1/64 |
| TWO (2) DECIMALS | ± 0.010 |
| THREE (3) DECIMALS | ± 0.005 |
| ANGLES | ± 0.5° |

| | | | | | | | |
|---|---|---|---|---|---|---|---|
| DRAWN: | 3/5/2018 | BY: | hhg | SCALE: | 1:8 | SIZE: | B |
| RELEASED: | 3/5/2018 | FILENAME: | 345164 | APPROVED BY: | hhg | | |

DESCRIPTION:
ASSY, GUIDE, SLIDE, GUIDE, LANE

DRAWING NUMBER:
345164

ARPAC B SIZE FORMAT R5

| BILL OF MATERIALS | | | |
|---|---|---|---|
| ITEM | QTY | NUMBER | DESCRIPTION |
| 1 | 1 | 345484 | WLDMT, RAIL, COMPRESION SECTION |
| 2 | 1 | 345484-001 | WLDMT, RAIL, LH, COMPRESION SECTION |
| 3 | 2 | 333980 | RAIL, TRANSFER, TRAY |
| 4 | 2 | 369931 | PLT, GUIDE, BLANK |
| 5 | 2 | 297844 | BLK, MTG, TRANSFER, ENTRANCE |

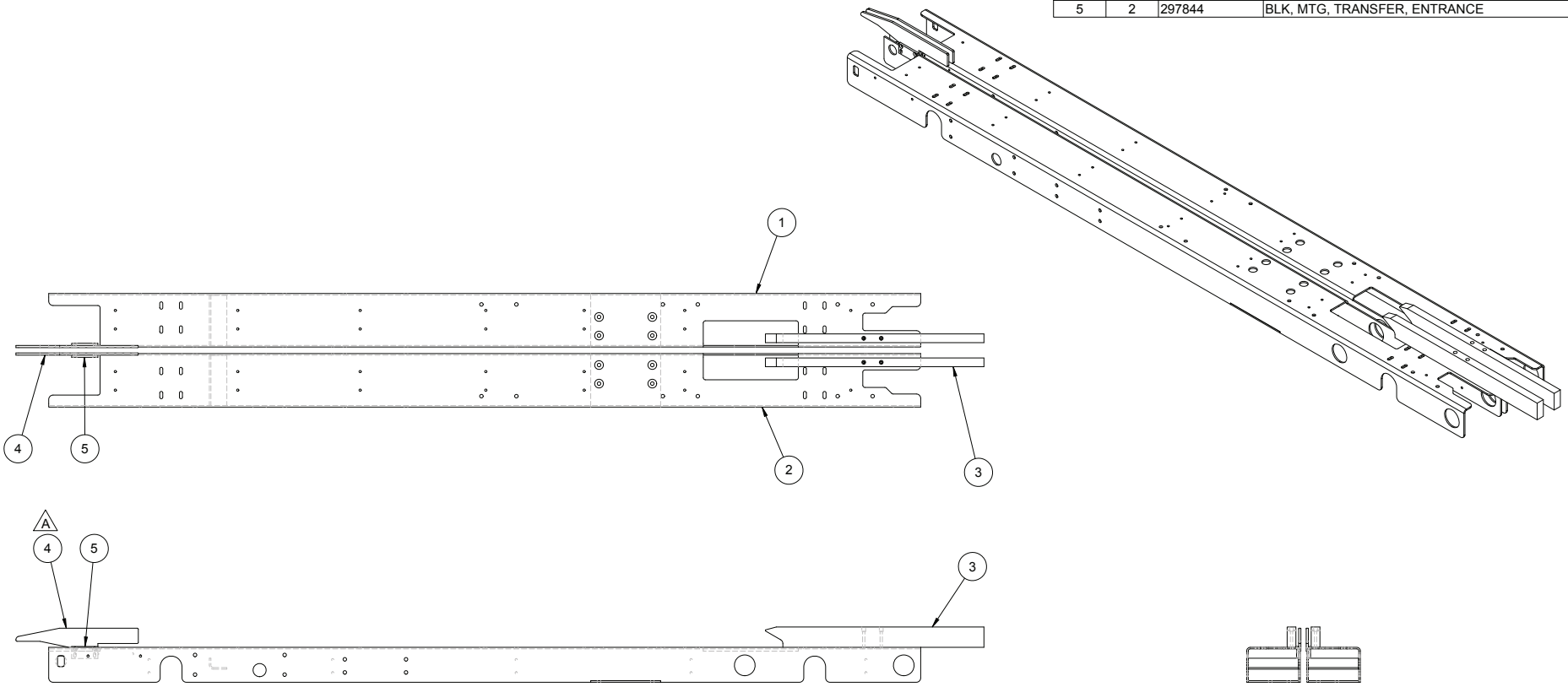


| REV | DATE | BY | NOTE |
|---|---|---|---|
| A | 1/6/2020 | SRA | PART 3# 369931 WAS 297843 |

REVISIONS

NOTES
- INTERPRET PER ASME Y14.5M-1994.
- DIMENSIONS ARE IN INCHES [mm].
- DIMENSIONS IN PARENTHESES FOR REFERENCE ONLY.
- BREAK SHARP EDGES AND CORNERS.
- PROPRIETARY NOTICE: THIS INFORMATION IS THE PROPERTY OF ARPAC LLC AND SHALL NOT BE USED FOR ANY PURPOSE OTHER THAN THAT FOR WHICH IT WAS OBTAINED.
- CREATED IN SOLIDWORKS 2013.

CREATED IN SOLIDWORKS 2013

ARPAC A DURAVANT COMPANY
9555 W. Irving Park Rd.
Schiller Park, IL 60176
www.arpac.com

| | | |
|---|---|---|
| MODEL | FILE \ CONFIG | 345485\345485 |
| | SIMILAR TO | -- |
| | DATE CREATED | Friday, March 11, 2011 12:40:24 AM |
| | DATE UPDATED | Monday, January 6, 2020 11:41:18 AM |
| | UPDATED BY | sarcher |
| DRAFT | DATE CREATED | Monday, March 27, 2017 3:19:24 PM |
| | DATE UPDATED | Monday, January 6, 2020 11:40:50 AM |
| | UPDATED BY | sarcher |

SIZE: B
SCALE: 1:12
3RD ANGLE
UNITS: INCH
TOLERANCES
X/X: ±1/32
X.XX: ±.015
X.XXX: ±.005
ANGLES: ±1°

MATERIAL: SEE BILL OF MATERIALS
FINISH: NONE

DESCRIPTION: ASSY, RAIL
NUMBER: 345485

"C:\ARPAC_VAULT\Designs\340000\345000\345485.slddrw" accessed Monday, January 6, 2020.

SHEET 1 OF 1

| BILL OF MATERIALS | | | |
|---|---|---|---|
| ITEM | QTY | NUMBER | DESCRIPTION |
| 1 | 2 | 190812-000A | CHAIN GUIDE #60 (SHORT) |
| 2 | 2 | 190813-000A | CHAIN GUIDE #60 (LONG) |
| 3 | 26 | 801359 | CLAMP, RAIL, SINGLE, 1.5 LG, SS, ROUND HOLE |
| 4 | 4 | 226432-006 | SPACER |
| 5 | 4 | 226432-005 | SPACER |
| 6 | 4 | 237912 | TENSIONER |

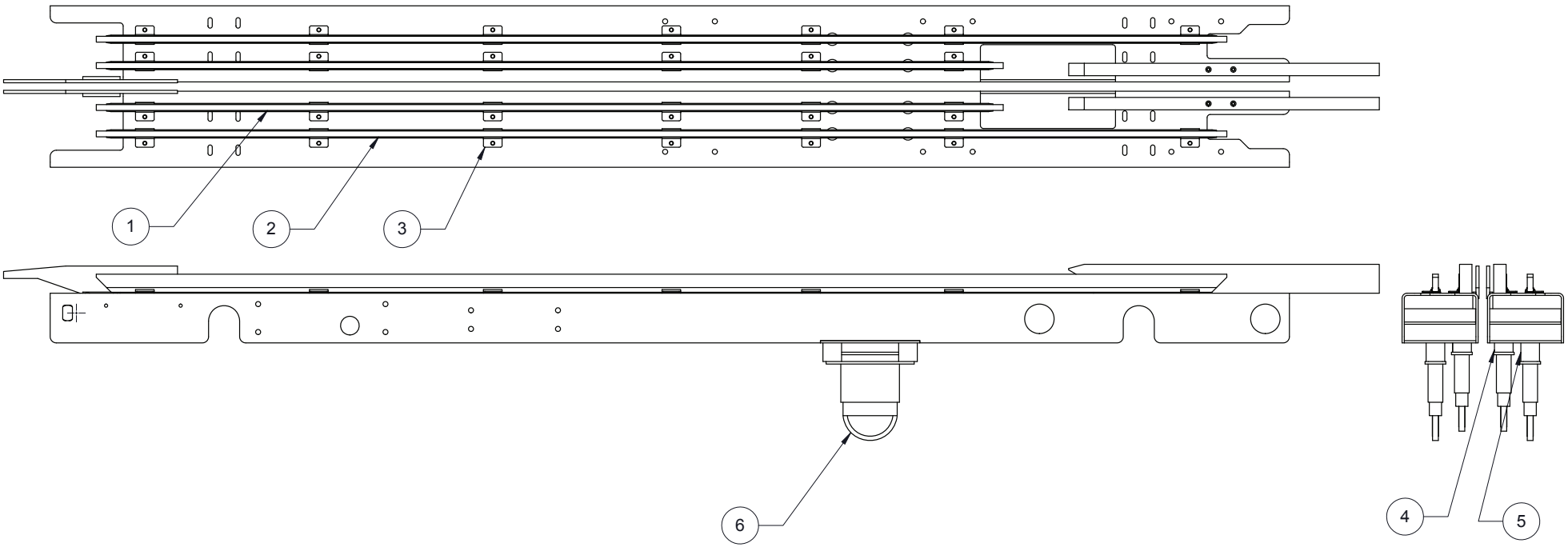


ARPAC
9511 WEST RIVER ST.
SCHILLER PARK, IL 60176

UNLESS OTHERWISE SPECIFIED
ALL DIMENSIONAL TOLERANCES:

| | |
|---|---|
| FRACTIONS | ± 1/64 |
| TWO (2) DECIMALS | ± 0.010 |
| THREE (3) DECIMALS | ± 0.005 |
| ANGLES | ± 0.5° |

| | | | |
|---|---|---|---|
| DRAWN: 5/24/2001 | BY: TTR | SCALE: 0.125:1 | SIZE: B |
| RELEASED: 5/24/2001 | FILENAME: 345486 | APPROVED BY: TTR | |

DESCRIPTION:
ASSY, CHAIN SUPPORT

DRAWING NUMBER:
345486

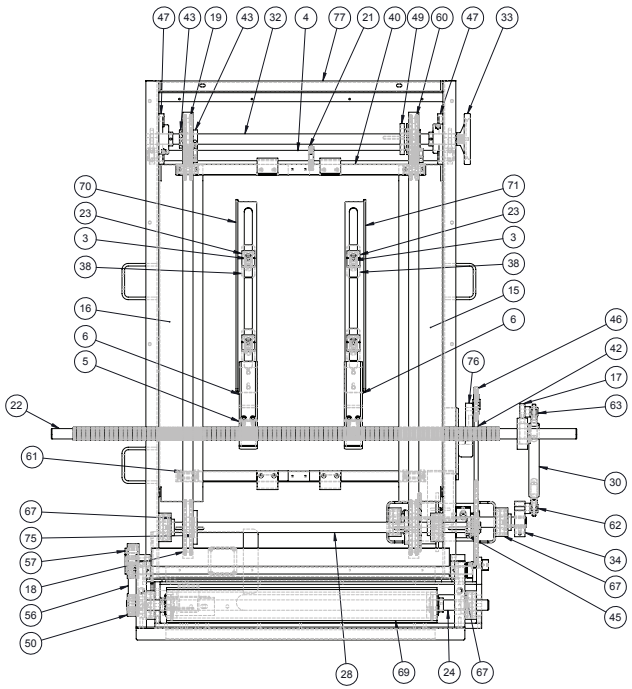


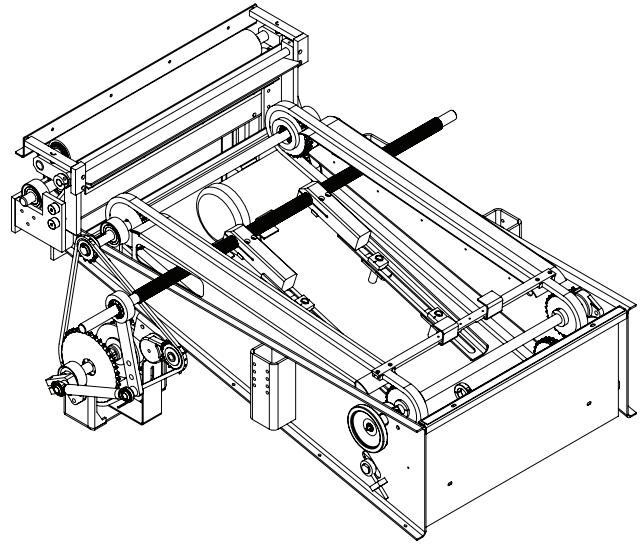

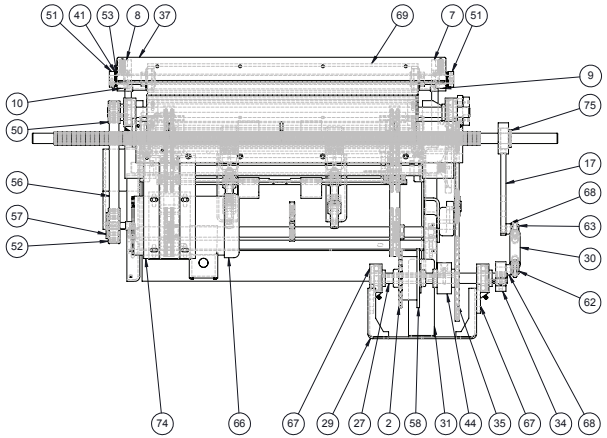


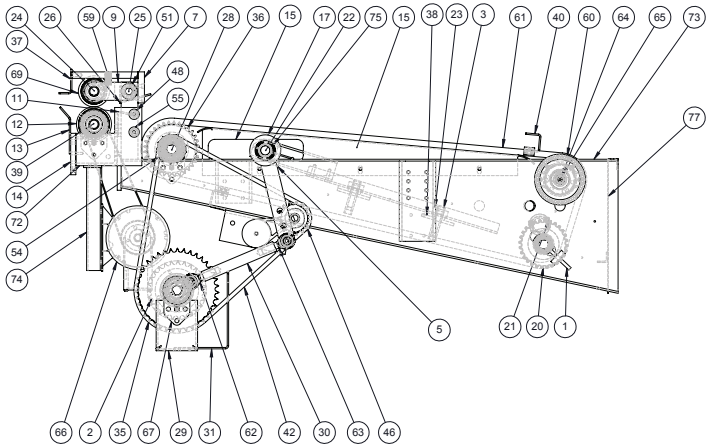


| ITM | QTY | PART NUM | DESCRIPTION |
|---|---|---|---|
| 77 | 1 | 291804 | PANEL, GUARD, MAGAZINE |
| 76 | 1 | 807279-001 | TENSIONER, SPRING, ROTARY 20-45LBS |
| 75 | 2 | 803668-001 | LOCKING DEVICE, KEYLESS 1" |
| 74 | 1 | 274122-001 | MNT, MOTOR |
| 73 | 1 | 290829 | WLDMT, FRAME, MAGAZINE, RH MACHINE |
| 72 | 1 | 195409A-001 | CROSS MEMBER RH MACHINE |
| 71 | 1 | 193131-003 | LH, OPPOSITE |
| 70 | 1 | 193131 -002 | RH, AS SHOWN |
| 69 | 1 | 189852-000 | RLR, PINCH, UPR |
| 68 | 2 | 144606-019 | SPACER, RND, 1", AL, 0.5LG, 21/32THRU |
| 67 | 6 | 837218 | BRG, FLG, 1 ID, 3-BOLT, STD DUTY |
| 66 | 1 | 827724 | MOTOR, 3/4 HP, 230/460V, 60HZ, 3PH, 56 FRM, FOOT MNT, 1200RPM, F1 CONDUIT BOX |
| 65 | 1 | 823057 | CLUTCH, ROLLER, DC 5/8 ID X 7/8 OD X 5/8 LG. (NOM.) |
| 64 | 1 | 823055 | RING, INNER .375 ID X .625 OD X .765 LG. |
| 63 | 1 | 822522 | ROD END, 5/8-18, MALE, LH THREAD |
| 62 | 1 | 822521 | ROD END, 5/8-18, MALE, RH THREAD |
| 61 | 16 | 821600 | CHAIN, DELRIN, #40 WITH SST PIN |
| 60 | 1 | 821596 | SPKT, D40P28, REQUIRE P1 BUSHING |
| 59 | 2 | 816471 | SPRING, COMP, 0.625 OD X 1.25 LG, .109 WIRE DIA (BLUE) |
| 58 | 1 | 816285 | CLUTCH, OVERLOAD, BORE 1", PROX PLT, SET TO 75 IN.#.WARPAC\# |
| 57 | 1 | 816284 | BUSH, TAPER, QT, .625 BORE |
| 56 | 1 | 810478 | BELT, TIMING, 8MM P, 20MM W, 800MM LG, 100 TEETH |
| 55 | 1 | 809737 | FOLLOWER, CAM, 1 OD, 5/8-18 STUD, W/HEX HOLE, SEALED |
| 54 | 1 | 809446 | SPKT, 50JA14 H, QD BUSH, HARDENED TEETH |
| 53 | 2 | 808128 | BUSH, OILITE, FLG, 0.752 X 0.879 X 3/4 1-1/8 OD X 1/8 THK FLG |
| 52 | 1 | 807464 | PULLEY, TIMING, 30T, 8MM P, 20MM W, QT BUSHING REQUIRED |
| 51 | 2 | 807096 | COLLAR, SHAFT, CLAMP, 1-PIECE, 3/4, EXTREME CL8867 |
| 50 | 1 | 807017 | PULLEY, TIMING, 22T, 8MM P, 20MM W, 1 BORE |
| 49 | 1 | 806450 | BUSH, TAPER, QD, 1 BORE X 1-15/16 LG, SPLIT TYPE |
| 48 | 1 | 802881 | FOLLOWER, CAM, 1 OD, 7/16-20 STUD, CROWNED, ECCENTRIC 5/8 O.D |
| 47 | 2 | 827116 | BRG, FLG, 1 ID, 2-BOLT, 3.89 BOLT CNTRS |
| 46 | 1 | 800905 | SPKT, 50BB15H, IDLER, 5/8 ID, HARDENED TEETH |
| 45 | 1 | 800665 | BUSH, TAPER, QD, 1 BORE X 1-1/16 LG. |
| 44 | 1 | 800609 | CPLG, PHASE-LOCK, HDI-25-1 1 BORE |
| 43 | 2 | 800600 | COLLAR, SHAFT, CLAMP, 1-PIECE |
| 42 | 1 | 800468 | CHAIN, RLR, #50 |
| 41 | 2 | 800438 | WSHR, OILITE, 0.753 X 1.375 X 1/8 THK |
| 40 | 2 | 290834 | ASSY, BAR, CHAIN, MAGAZINE FEED |
| 39 | 1 | 290831 | SHAFT, LWR, RLR, PINCH |
| 38 | 4 | 283409 | NUT, HANDLE |
| 37 | 1 | 282792 | DEFLECTOR, URR |
| 36 | 1 | 282754 | SPKT, D40B32, 32 TEETH, 1" P TYPE B |
| 35 | 1 | 243418 | SPRKT, DRIVEN |
| 34 | 1 | 231440 | BKT, CLAMP, PIVOT |
| 33 | 1 | 230295 | HANDWHEEL, 5" ROLLER CLUTCH |
| 32 | 1 | 230293 | SHAFT, TAIL CONV |
| 31 | 1 | 228962 | BKT, MTG, PROX |
| 30 | 1 | 223740 | ROD, CONNECTING, 1" |
| 29 | 1 | 223739 | MNT, SHAFT, JACK |
| 28 | 1 | 223738 | SHAFT, DRIVE |
| 27 | 1 | 223735 | SHAFT |
| 26 | 1 | 300037 | GUIDE, FEED, BLANK, TOP |
| 25 | 1 | 290833 | SHAFT, ROLLER, TOP, MTG |
| 24 | 1 | 223729 | SHAFT, RLR, UPR |
| 23 | 4 | 221942 | KEY, CUP MNT |
| 22 | 1 | 220995 | SHAFT, VAC., ARM |
| 21 | 1 | 214933 | WLDMT. MNT. VACUUM PUMP |
| 20 | 2 | 213235 | SPKT WITH BEARING |
| 19 | 1 | 213234 | SPKT, ASSY |
| 18 | 1 | 213233 | SPKT, D40B32, 32 TEETH, 1/2" P TYPE B |
| 17 | 1 | 197877 | PIVOT ARM |
| 16 | 1 | 193126 | RAMP, MAGAZINE, BELT, RH |
| 15 | 1 | 193125 | RAMP, MAGAZINE, BELT, LH |
| 14 | 1 | 193116 | PLATE |
| 13 | 1 | 193114 | BLANK SUPPORT MAGAZINE SIDE |
| 12 | 1 | 193100 | RLR, PINCH, LWR |
| 11 | 1 | 190818 | GUIDE, LOWER, MAG |
| 10 | 1 | 290832 | MOUNT, ROLLER, RH |
| 9 | 1 | 189367 | MOUNT, ROLLER, LH |
| 8 | 1 | 189366 | HOLDER, SPRING, RH |
| 7 | 1 | 189365 | HOLDER, SPRING, LH |
| 6 | 2 | 186513 | VACUUME CUP MNT. |
| 5 | 2 | 186490 | KEY |
| 4 | 1 | 186488 | SHAFT, CONV, LWR |
| 3 | 4 | 142585 | VACUUME CUP MNT |
| 2 | 1 | 140334 | SPKT WITH TLSP5U |
| 1 | 2 | 140332 | TAKE - UP SCREW |

BILL OF MATERIALS

ARPAC
9511 WEST RIVER ST.
SCHILLER PARK, IL 60176

UNLESS OTHERWISE SPECIFIED:
ALL DIMENSIONAL TOLERANCES:
FRACTIONS: ± 1/64
TWO (2) DECIMALS: ± 0.010
THREE (3) DECIMALS: ± 0.005
ANGLES: ± 0.5°

DRAWN: 4/17/2018 BY: SRA SCALE: 1:6 SIZE: D
RELEASED: FILENAME: 358161 APPROVED BY:
DESCRIPTION:
ASSY, ROLLERS, PINCH, RH MAGAZINE

DRAWING NUMBER:
358161

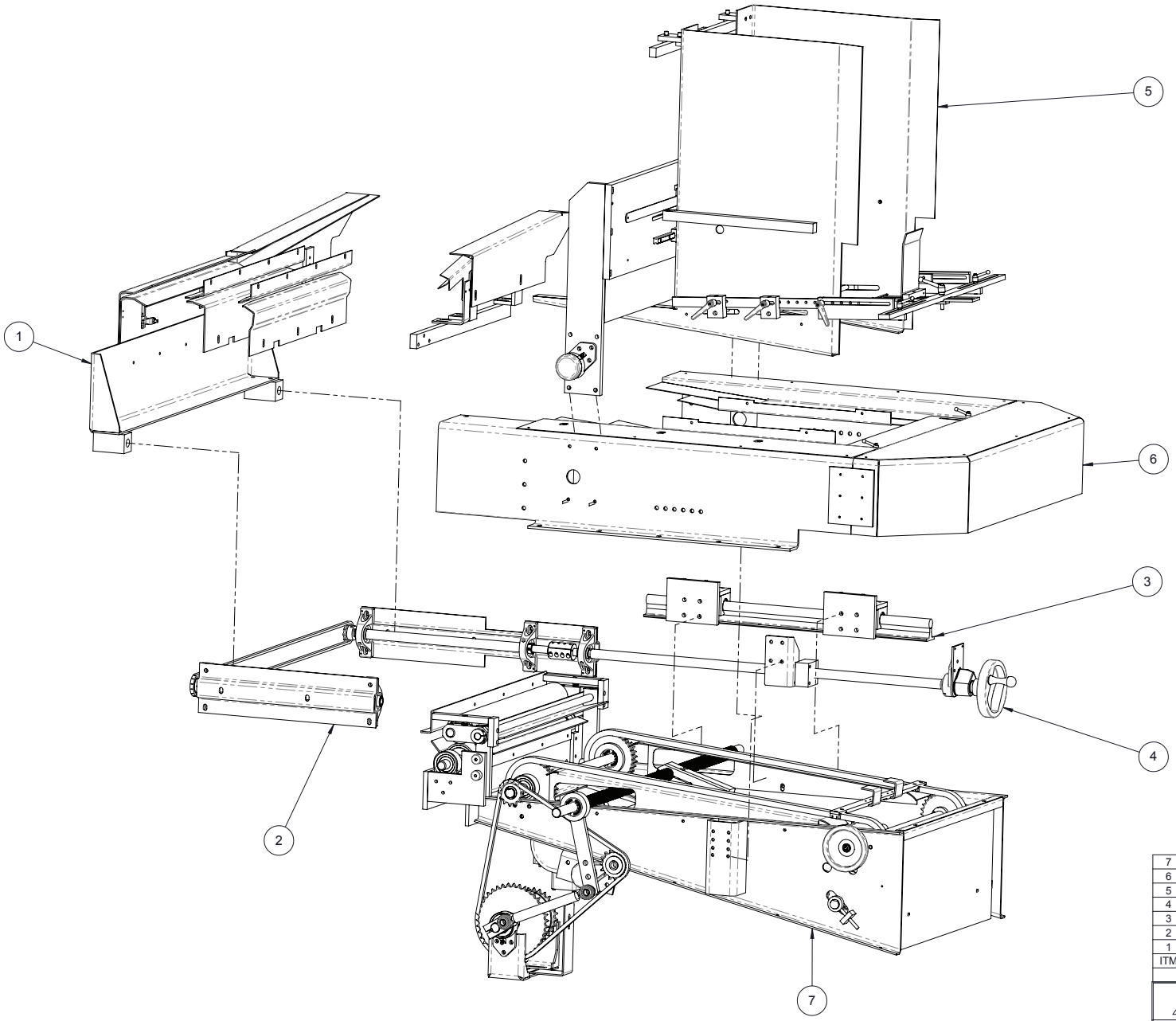


| ITM | QTY | PART NUM | DESCRIPTION |
|---|---|---|---|
| 7 | 1 | 358161 | ASSY, ROLLERS, PINCH, RH MAGAZINE |
| 6 | 1 | 290825 | ASSY, MAGAZINE, GUIDE, SUPPORT, RH |
| 5 | 1 | 328784 | ASSY, HOPPER, RH MACH |
| 4 | 1 | 290792 | ASSY, SCREW, ADJ, RH |
| 3 | 1 | 290827 | ASSY, MAGAZINE, GUIDE, RH |
| 2 | 1 | 290828 | ASSY, SCREW, ADJ, MAGAZINE |
| 1 | 1 | 244278-002 | ASSY, BLANK, SUPPORT & GUIDE, RH |

BILL OF MATERIALS

ARPAC
9511 WEST RIVER ST.
SCHILLER PARK, IL 60176

UNLESS OTHERWISE SPECIFIED
ALL DIMENSIONAL TOLERANCES:

| | |
|---|---|
| FRACTIONS | ± 1/64 |
| TWO (2) DECIMALS | ± 0.010 |
| THREE (3) DECIMALS | ± 0.005 |
| ANGLES | ± 0.5° |

| | | | |
|---|---|---|---|
| DRAWN: 3/31/2021 | BY: SRA | SCALE: 1:8 | SIZE: C |
| RELEASED: | FILENAME: 358162 | APPROVED BY: | |

DESCRIPTION:
ASSY, MAGAZINE, BLANK FEED, TS-2000, RH

DRAWING NUMBER:
358162

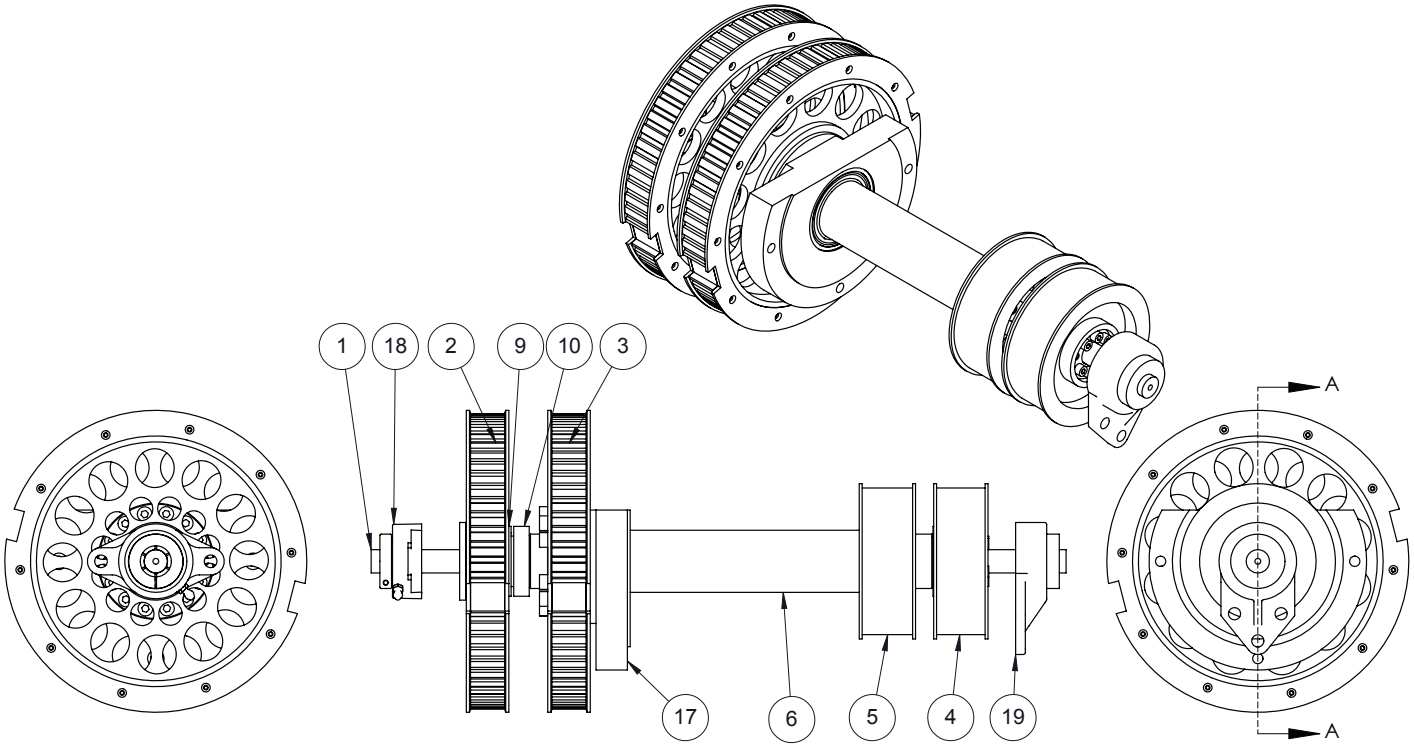


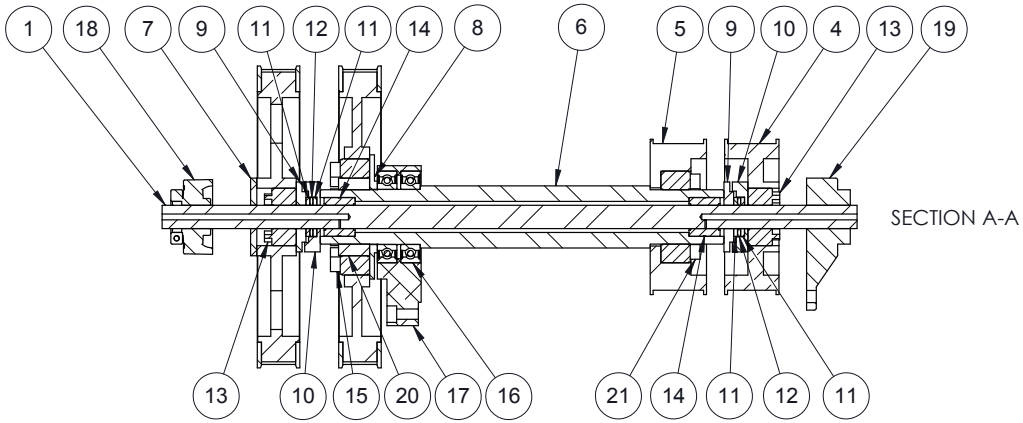


SECTION A-A

| ITM | QTY | PART NUM | DESCRIPTION |
|---|---|---|---|
| 21 | 1 | 803668-007 | LOCKING DEVICE, KEYLESS 1-3/4" |
| 20 | 1 | 221042 | ADAPTOR, PULLEY LOWER, OUTER SPINDEL |
| 19 | 1 | 802770 | BRG, FLG, 3/4 ID, 3-BOLT, SINGLE-LOCK, STANDARD DUTY |
| 18 | 1 | 807854 | BRG, FLG, 3/4 ID, 2-BOLT, SKWEZLOC, STANDARD-DUTY |
| 17 | 1 | 193202 | HOUSING |
| 16 | 2 | 817243 | BRG, CART, 1.771 X 2.95 X .6299 LG TWO SEALS |
| 15 | 1 | 803668-009 | LOCKING DEVICE, KEYLESS 2-1/2" |
| 14 | 2 | 846484 | BRG, NEEDLE, 3/4 X 1-1/4 X 1 LG, DOUBLE SEAL, HEAVY DUTY |
| 13 | 2 | 803668 | LOCKING DEVICE, KEYLESS 3/4 |
| 12 | 2 | 802947 | BRG, THRUST, 3/4 X 1-1/4 X 5/64 RLR DIA, |
| 11 | 4 | 802948 | WSHR, THRUST, 3/4 X 1-1/4 X 1/8 THK |
| 10 | 2 | 108509 | BEARING, HOUSING |
| 9 | 2 | 108508 | DISK ,VERT. SHAFT RETAINER |
| 8 | 1 | 193201 | SPACER |
| 7 | 1 | 193200 | DISK, VERT. SHAFT RETAINER |
| 6 | 1 | 364841 | SPINDLE, OUTER |
| 5 | 1 | 195556 | PULLEY, 30T, 1/2P, 1-1/2W, SPECIAL |
| 4 | 1 | 108570 | SPINDLE INNER DRIVER SPROCKET |
| 3 | 1 | 221040 | PULLEY,OUTER SPINDLE, LOWER |
| 2 | 1 | 221038 | PULLEY,INNER SPINDLE, UPPER |
| 1 | 1 | 193195 | CONCENTRIC DRIVE SPINDLE INNER SHAFT |

BILL OF MATERIALS

ARPAC
9511 WEST RIVER ST.
SCHILLER PARK, IL 60176

UNLESS OTHERWISE SPECIFIED
ALL DIMENSIONAL TOLERANCES:

| | |
|---|---|
| FRACTIONS | ± 1/64 |
| TWO (2) DECIMALS | ± 0.010 |
| THREE (3) DECIMALS | ± 0.005 |
| ANGLES | ± 0.5° |

| | | | |
|---|---|---|---|
| DRAWN: 1/14/2020 | BY: HG | SCALE: 1:4 | SIZE: B |
| RELEASED: | FILENAME: 364832 | APPROVED BY: | |

DESCRIPTION:
ASSY, PULLEY, DRIVE, VERTICAL

DRAWING NUMBER:
364832

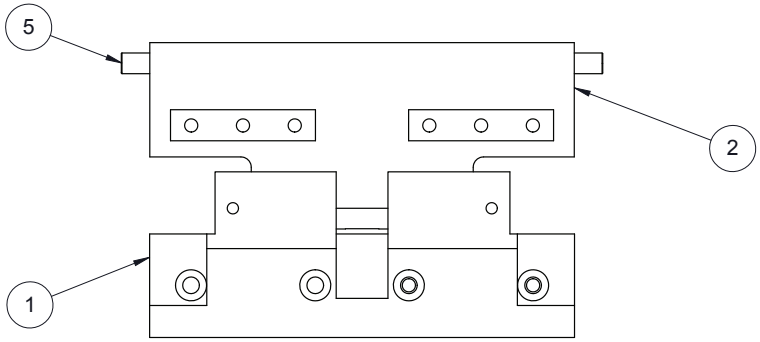


369992

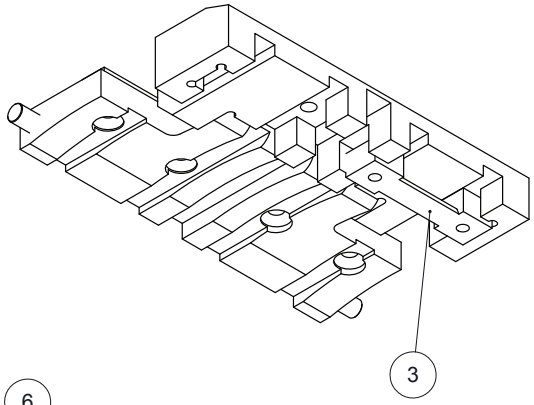


369992-001

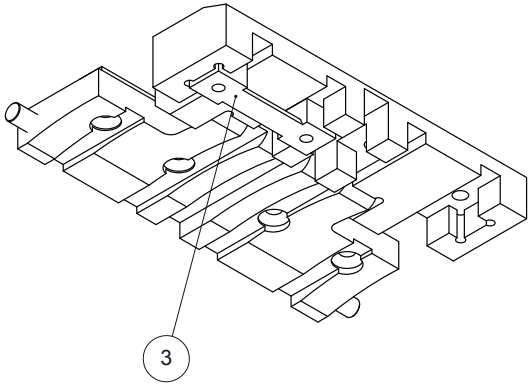


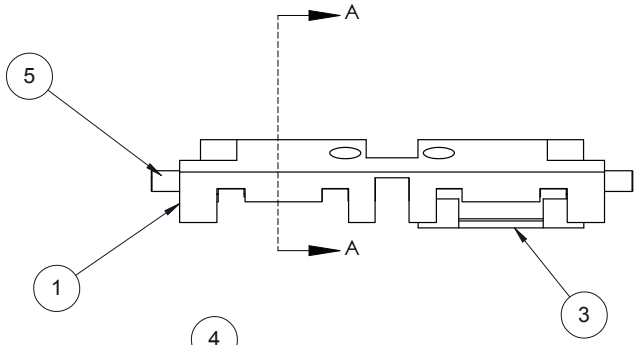


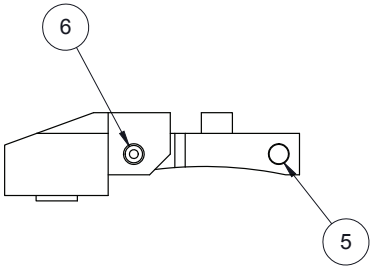


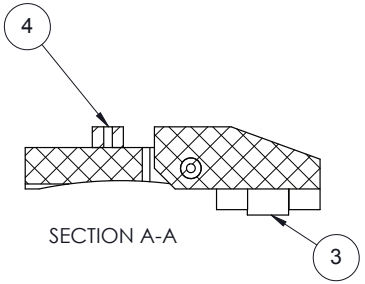


SECTION A-A

369992 AS SHOWN
369992-001 OPPOSITE

| ITM | QTY | PART NUM | DESCRIPTION |
|---|---|---|---|
| 6 | 2 | 195469 | MOUNTING PIN - LONG |
| 5 | 2 | 803621-008 | PIN, DOWEL, 1/4 X 3/4, SS, |
| 4 | 2 | 286739 | LUG, MNT KEY |
| 3 | 1 | 193215 | CLAMP |
| 2 | 1 | 286738 | MNT, LUG |
| 1 | 1 | 286737 | BRACKET |

BILL OF MATERIALS

ARPAC
9511 WEST RIVER ST.
SCHILLER PARK, IL 60176

UNLESS OTHERWISE SPECIFIED
ALL DIMENSIONAL TOLERANCES:

| | |
|---|---|
| FRACTIONS | ± 1/64 |
| TWO (2) DECIMALS | ± 0.010 |
| THREE (3) DECIMALS | ± 0.005 |
| ANGLES | ± 0.5° |

DRAWN: 1/15/2020 BY: SRA SCALE: 2:3 SIZE: B

FILENAME: 369992

DESCRIPTION: ASSY, CARRIER, LUG, COLLATOR

DRAWING NUMBER: 369992

ARPAC B SIZE FORMAT R5.1

| BILL OF MATERIALS | | | |
|---|---|---|---|
| ITEM | QTY | NUMBER | DESCRIPTION |
| 1 | 1 | 371504 | BLK, SPACER, SUPPORT, FRAME, DOOR |
| 2 | 1 | 371503 | PLT, SUPPORT, FRAME, DOOR |
| 3 | 1 | 371511 | PLT, CLAMP |
| 4 | 1 | 371507 | WLDMT, ADJ, FRAME, DOOR |
| 5 | 4 | 845826 | T-NUT, E, M6, SLIDING DOORS |

NOTE: ITEM 5 NOT SHOWN

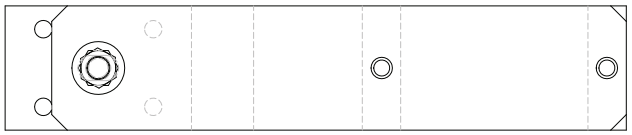

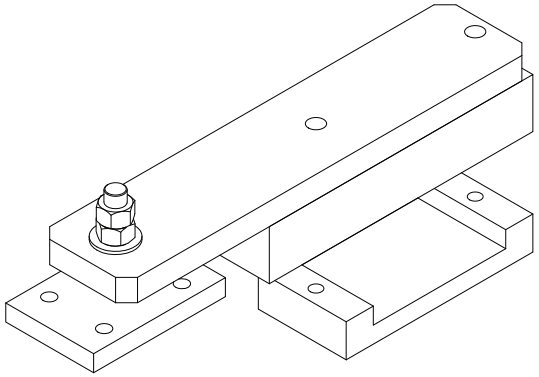

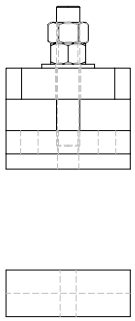

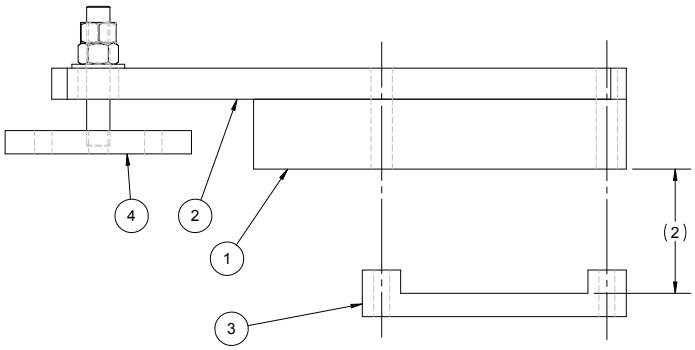


| REV | DATE | BY | NOTE |
|---|---|---|---|
| REVISIONS | | | |

NOTES
- INTERPRET PER ASME Y14.5M-1994.
- DIMENSIONS ARE IN INCHES [mm].
- DIMENSIONS IN PARENTHESES FOR REFERENCE ONLY.
- BREAK SHARP EDGES AND CORNERS.
- PROPRIETARY NOTICE: THIS INFORMATION IS THE PROPERTY OF ARPAC LLC AND SHALL NOT BE USED FOR ANY PURPOSE OTHER THAN THAT FOR WHICH IT WAS OBTAINED.
- CREATED IN SOLIDWORKS 2018.

CREATED IN SOLIDWORKS 2018

ARPAC A DURAVANT COMPANY
9555 W. Irving Park Rd.
Schiller Park, IL 60176
www.arpac.com

| | | |
|---|---|---|
| MODEL | FILE \ CONFIG | 371514\Default |
| | SIMILAR TO | -- |
| | DATE CREATED | Monday, April 13, 2020 3:42:21 PM |
| | DATE UPDATED | Monday, April 13, 2020 5:50:03 PM |
| | UPDATED BY | sarcher |
| DRAFT | DATE CREATED | Monday, April 13, 2020 3:57:17 PM |
| | DATE UPDATED | Monday, April 13, 2020 4:43:40 PM |
| | UPDATED BY | sarcher |

| SIZE | SCALE | MATERIAL | DESCRIPTION |
|---|---|---|---|
| B | 1:2 | SEE BILL OF MATERIALS | ASSY, SUPPORT, ADJ, FRAME, DOOR |
| 3RD ANGLE | UNITS | | |
| | INCH | | |
| TOLERANCES | | FINISH | NUMBER |
| X/X: ±1/32<br>X.XX: ±.015<br>X.XXX: ±.005<br>ANGLES: ±1° | | NONE | 371514 |

"C:\ARPAC_VAULT\Designs_CORRUGATED\TS-2300\17522\371514.slddrw" accessed Monday, April 13, 2020.

SHEET 1 OF 1

ARPAC B SIZE FORMAT R5.1

| BILL OF MATERIALS | | | |
|---|---|---|---|
| ITEM | QTY | NUMBER | DESCRIPTION |
| 1 | 1 | 371512 | PLT, SUPPORT, FRAME, DOOR |
| 2 | 1 | 371513 | BLK, SPACER, SUPPORT, FRAME, DOOR |
| 3 | 1 | 371507 | WLDMT, ADJ, FRAME, DOOR |
| 4 | 4 | 845826 | T-NUT, E, M6, SLIDING DOORS |

NOTE: ITEM 4 NOT SHOWN

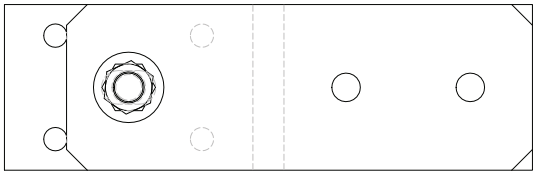

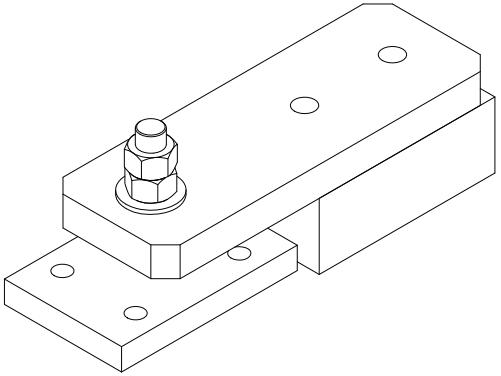

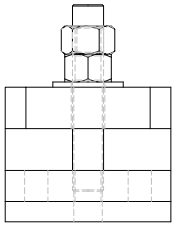

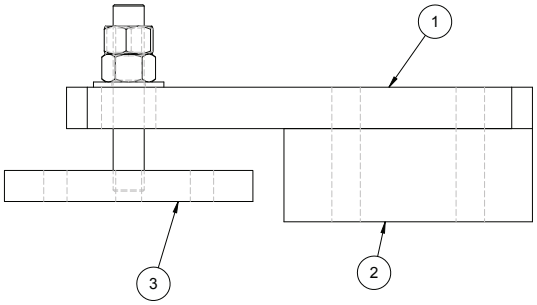


| REV | DATE | BY | NOTE |
|---|---|---|---|
| REVISIONS | | | |

NOTES
- INTERPRET PER ASME Y14.5M-1994.
- DIMENSIONS ARE IN INCHES [mm].
- DIMENSIONS IN PARENTHESES FOR REFERENCE ONLY.
- BREAK SHARP EDGES AND CORNERS.
- PROPRIETARY NOTICE: THIS INFORMATION IS THE PROPERTY OF ARPAC LLC AND SHALL NOT BE USED FOR ANY PURPOSE OTHER THAN THAT FOR WHICH IT WAS OBTAINED.
- CREATED IN SOLIDWORKS 2018.

CREATED IN SOLIDWORKS 2018

ARPAC A DURAVANT COMPANY
9555 W. Irving Park Rd.
Schiller Park, IL 60176
www.arpac.com

| | | |
|---|---|---|
| MODEL | FILE \ CONFIG | 371515\Default |
| | SIMILAR TO | -- |
| | DATE CREATED | Monday, April 13, 2020 4:13:59 PM |
| | DATE UPDATED | Monday, April 13, 2020 5:50:02 PM |
| | UPDATED BY | sarcher |
| DRAFT | DATE CREATED | Monday, April 13, 2020 4:21:06 PM |
| | DATE UPDATED | Monday, April 13, 2020 4:44:01 PM |
| | UPDATED BY | sarcher |

SIZE: B
SCALE: 2:3
3RD ANGLE
UNITS: INCH
TOLERANCES
X/X: ±1/32
X.XX: ±.015
X.XXX: ±.005
ANGLES: ±1°

MATERIAL: SEE BILL OF MATERIALS
FINISH: NONE

DESCRIPTION: ASSY, SUPPORT, ADJ, FRAME, DOOR
NUMBER: 371515

"C:\ARPAC_VAULT\Designs_CORRUGATED\TS-2300\17522\371515.slddrw" accessed Monday, April 13, 2020.

ARPAC B SIZE FORMAT R5.1

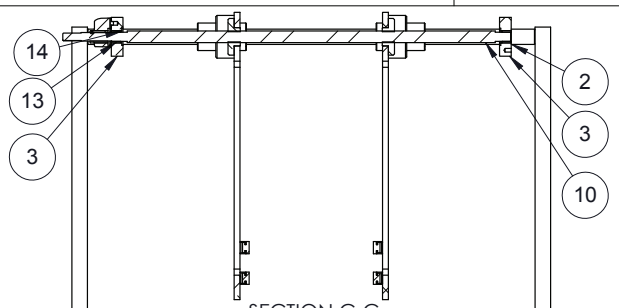


SECTION C-C

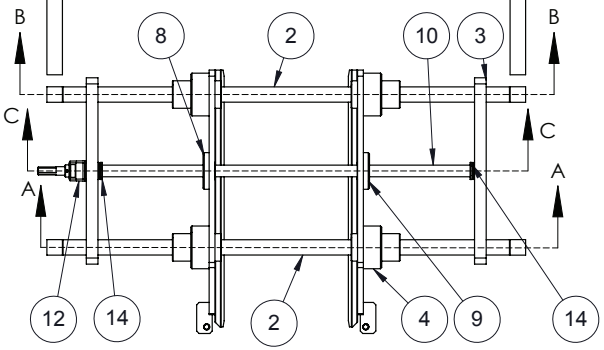


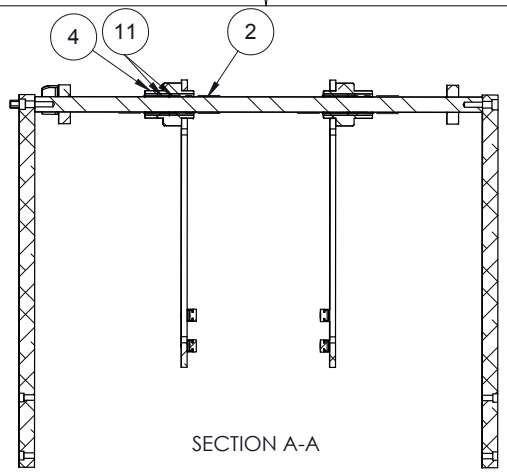


SECTION A-A

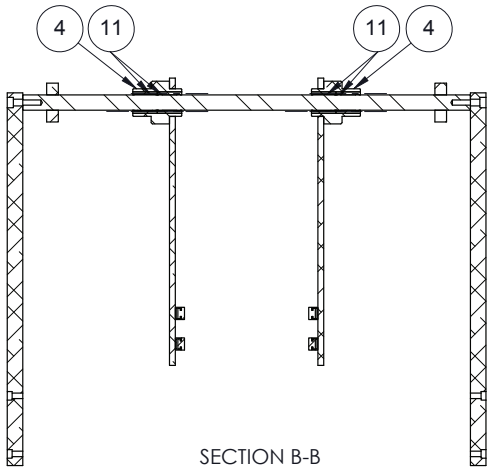


SECTION B-B

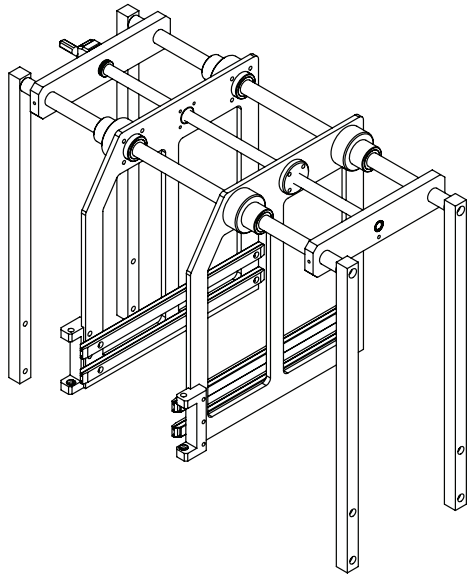

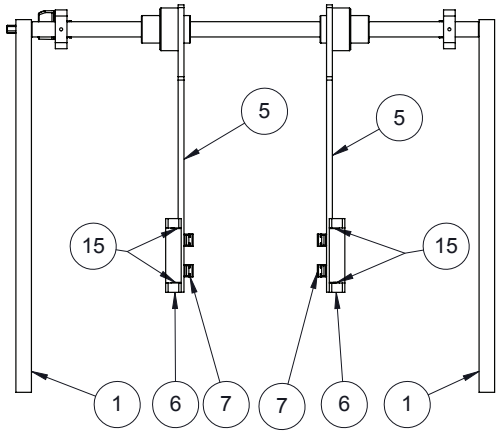


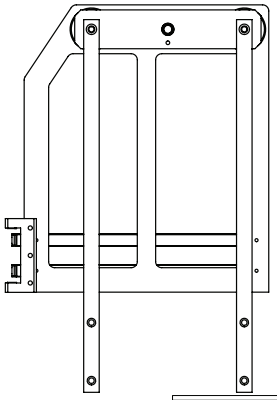

BILL OF MATERIALS

| ITEM | QTY | NUMBER | DESCRIPTION |
|---|---|---|---|
| 1 | 4 | 284073 | SUPPORT COLUMN GUIDES |
| 2 | 2 | 372299 | BAR, SUPPORT, GUIDE, LANE |
| 3 | 2 | 284077 | HANDRAIL SUPPORT |
| 4 | 4 | 284080 | SUPPORT SLEEVE |
| 5 | 2 | 284081 | PLT, SIDE, GUIDE, LANE |
| 6 | 2 | 284082 | BLK, SUPPORT, GUIDE, LANE |
| 7 | 4 | 289850 | GUIDE, CHAIN, 14X20MM MODIFIED |
| 8 | 1 | 293304 | NUT, GUIDE, SCREW, ADJ, GUIDE, LANE |
| 9 | 1 | 293305 | NUT, GUIDE, SCREW, ADJ, GUIDE, LANE |
| 10 | 1 | 372274 | SCREW, ADJ, GUIDE, LANE, 17" OPEN |
| 11 | 8 | 827974 | BRG, LINEAR, BALL, ID25MM, OD35MM, L40MM |
| 12 | 1 | 827975 | INDICATOR, DIGITAL, DIRECT DRIVE, INCLINED UPPER, P4MM, CW |
| 13 | 2 | 845289 | BUSH, OILITE, 20MM OD X 15MM ID X 15MML |
| 14 | 2 | 846868 | BRG, BALL, DEEP GROOVE, AXIAL, ID15MM, OD28MM, W9MM |
| 15 | 4 | 845590 | BUSH, FLG, 8MM ID X 10MM OD X 9.5MM LG X 15MM FLG OD |

NOTES
- INTERPRET PER ASME Y14.5M-1994.
- DIMENSIONS ARE IN INCHES [mm].
- DIMENSIONS IN PARENTHESES FOR REFERENCE ONLY.
- BREAK SHARP EDGES AND CORNERS.
- PROPRIETARY NOTICE: THIS INFORMATION IS THE PROPERTY OF ARPAC LLC AND SHALL NOT BE USED FOR ANY PURPOSE OTHER THAN THAT FOR WHICH IT WAS OBTAINED.
- CREATED IN SOLIDWORKS 2018.

CREATED IN SOLIDWORKS 2018

| | | |
|---|---|---|
| MODEL | FILE \ CONFIG | 372271\372271 |
| | SIMILAR TO | |
| | DATE CREATED | Friday, June 29, 2012 3:56:01 PM |
| | DATE UPDATED | Wednesday, March 24, 2021 6:10:44 PM |
| | UPDATED BY | sarcher |
| DRAFT | DATE CREATED | Tuesday, September 11, 2012 9:21:31 AM |
| | DATE UPDATED | Wednesday, March 24, 2021 6:12:10 PM |
| | UPDATED BY | sarcher |

ARPAC A DURAVANT COMPANY
9555 W. Irving Park Rd.
Schiller Park, IL 60176
www.arpac.com

SIZE: B
SCALE: 1:8
3RD ANGLE
UNITS: INCH
TOLERANCES
X/X: ±1/32
X.XX: ±.015
X.XXX: ±.005
ANGLES: ±1°

MATERIAL: SEE BILL OF MATERIALS

FINISH: PART OF ASSEMBLY

DESCRIPTION: ASSY, GUIDE, LANE, ENTRY, DIVIDER, DYNAMIC, MAX 10" W

NUMBER: 372271

"C:\ARPAC_VAULT\Designs_CORRUGATED\TS-2300\17766\372271.slddrw" accessed Wednesday, March 24, 2021.

SHEET 1 OF 1

ARPAC B SIZE FORMAT R5.1

| BILL OF MATERIALS | | | |
|---|---|---|---|
| ITEM | QTY | NUMBER | DESCRIPTION |
| 1 | 1 | 284203 | SENSOR ADJUSTMENT SUPPORT |
| 2 | 1 | 284206-001 | BAR, VERTICAL ADJ, 13" LG |
| 3 | 4 | 284207 | FLANGE PLACKAT |
| 4 | 1 | 372280 | BAR, BRIDGE, ADJ |
| 5 | 2 | 284209 | SUPPORT BRACE |
| 6 | 2 | 284210 | BLK, CLAMP BODY |
| 7 | 2 | 845686 | HANDLE, ADJ, M6X1, THRD 45MM, HNDL RAD 30MM |
| 8 | 1 | 306874 | PLT, ADAPTOR, MTG, SENSOR |

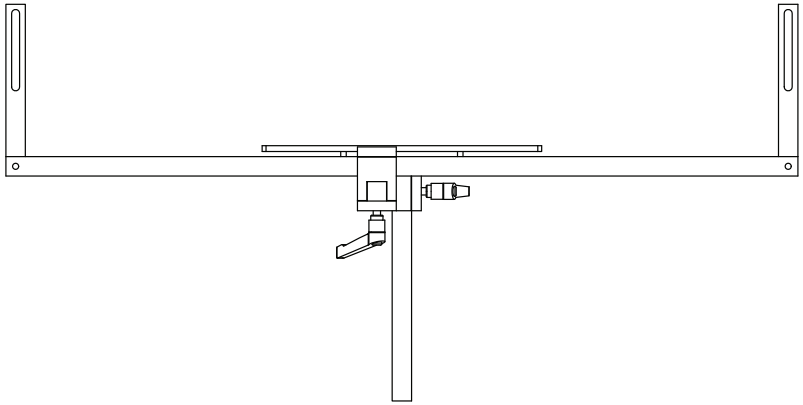

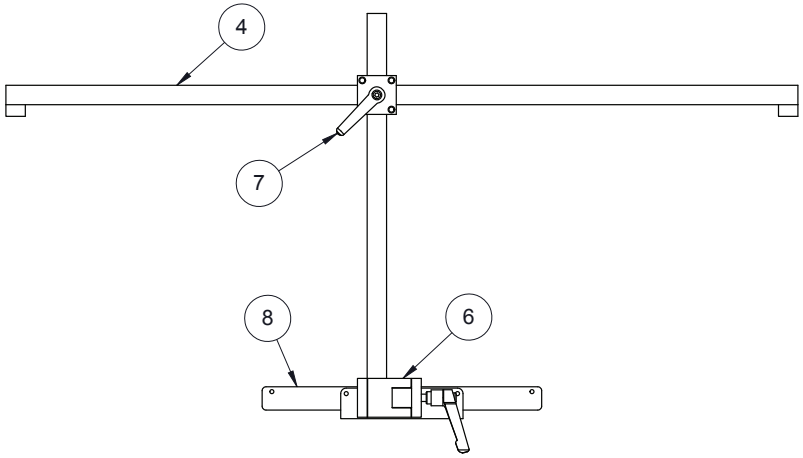


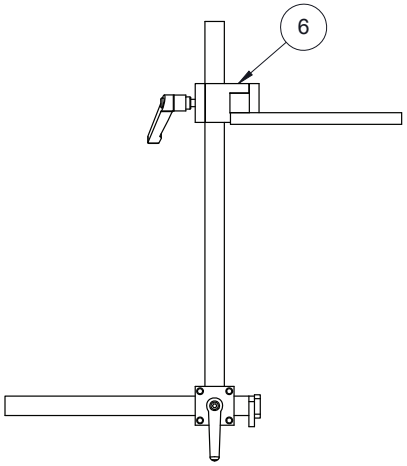


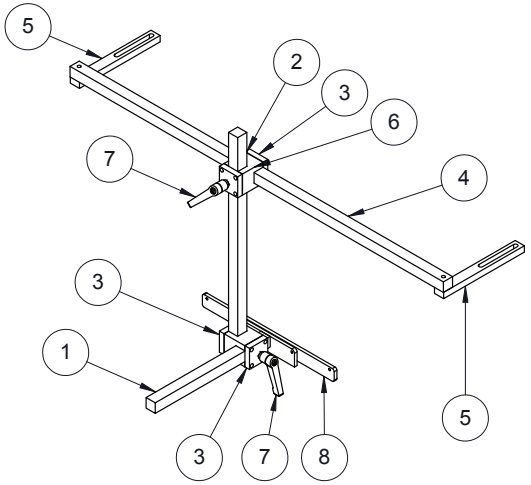


NOTES
- INTERPRET PER ASME Y14.5M-1994.
- DIMENSIONS ARE IN INCHES [mm].
- DIMENSIONS IN PARENTHESES FOR REFERENCE ONLY.
- BREAK SHARP EDGES AND CORNERS.
- PROPRIETARY NOTICE: THIS INFORMATION IS THE PROPERTY OF ARPAC LLC AND SHALL NOT BE USED FOR ANY PURPOSE OTHER THAN THAT FOR WHICH IT WAS OBTAINED.
- CREATED IN SOLIDWORKS 2018.

CREATED IN SOLIDWORKS 2018

ARPAC A DURAVANT COMPANY
9555 W. Irving Park Rd.
Schiller Park, IL 60176
www.arpac.com

| | | |
|---|---|---|
| MODEL | FILE \ CONFIG | 372277\372277 |
| | SIMILAR TO | |
| | DATE CREATED | Monday, July 2, 2012 1:01:55 PM |
| | DATE UPDATED | Friday, July 24, 2020 10:50:11 AM |
| | UPDATED BY | jw |
| DRAFT | DATE CREATED | Wednesday, August 29, 2012 4:40:16 PM |
| | DATE UPDATED | Friday, July 24, 2020 10:50:46 AM |
| | UPDATED BY | jw |

SIZE: B
SCALE: 1:8
3RD ANGLE
UNITS: INCH

TOLERANCES
X/X: ±1/32
X.XX: ±.015
X.XXX: ±.005
ANGLES: ±1°

MATERIAL: SEE BILL OF MATERIALS

FINISH: PART OF ASSEMBLY

DESCRIPTION: ASSY, PRODUCT COUNT, DYN DIV

NUMBER: 372277

"C:\ARPAC_VAULT\Designs_CORRUGATED\TS-2300\17766\372277.slddrw" accessed Monday, August 10, 2020.

SHEET 1 OF 1

ARPAC B SIZE FORMAT R5

| BILL OF MATERIALS | | | |
|---|---|---|---|
| ITEM | QTY | NUMBER | DESCRIPTION |
| 1 | 2 | 284097 | ASSY, WLDMT, SUPPORT, CARRIER |
| 2 | 4 | 300373 | DEFLECTION ROLLER |
| 3 | 4 | 309572-009 | SHAFT, IDLER |
| 4 | 4 | 315002 | PLT, CONNECTING, CONV, DIVIDER, DYNAMIC, CSINK |
| 5 | 7 | 345146 | CROSSBAR, INTERMEDIATE |
| 6 | 1 | 372288 | PLT, SIDE, CONV, DIVIDER, DYNAMIC |
| 7 | 1 | 372288-001 | PLT, SIDE, CONV, DIVIDER, DYNAMIC |
| 8 | 6 | 801296-002 | RAIL, GUIDE, TEE, 1.60 W, 10' LG, SS |
| 9 | 42 | 801359 | CLAMP, RAIL, SINGLE, 1.5 LG, SS, ROUND HOLE |
| 10 | 2 | 850128 | EXTRUSION, UHMW, J-LEGS, 10' LG, FOR 11GA SHEET |

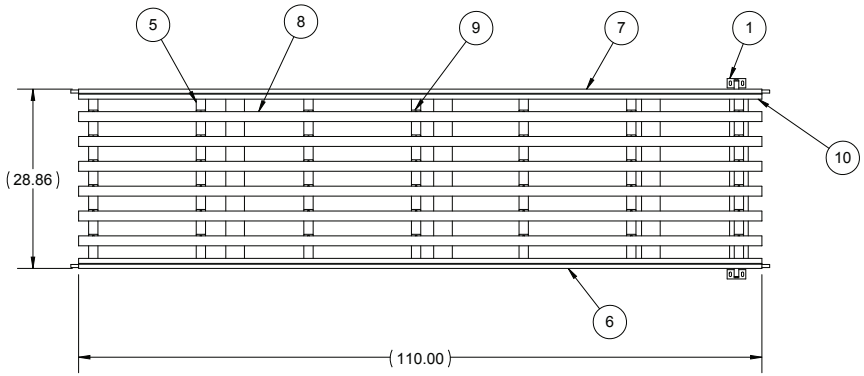


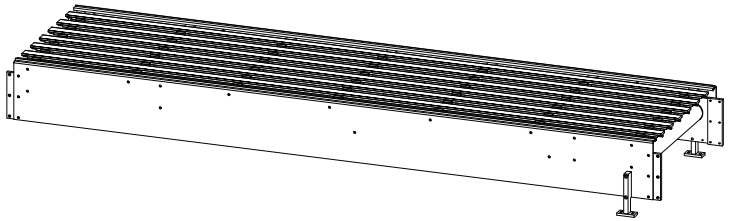

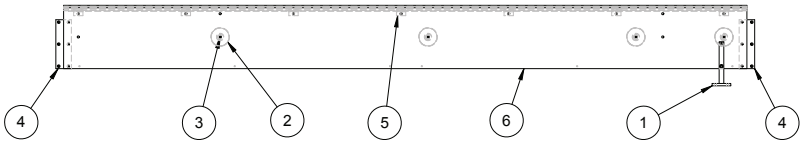


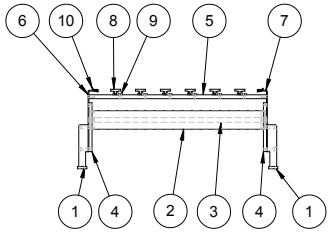


| REV | DATE | BY | NOTE |
|---|---|---|---|
| REVISIONS | | | |

NOTES
- INTERPRET PER ASME Y14.5M-1994.
- DIMENSIONS ARE IN INCHES [mm].
- DIMENSIONS IN PARENTHESES FOR REFERENCE ONLY.
- BREAK SHARP EDGES AND CORNERS.
- PROPRIETARY NOTICE: THIS INFORMATION IS THE PROPERTY OF ARPAC LLC AND SHALL NOT BE USED FOR ANY PURPOSE OTHER THAN THAT FOR WHICH IT WAS OBTAINED.
- CREATED IN SOLIDWORKS 2013.

CREATED IN SOLIDWORKS 2013

ARPAC A DURAVANT COMPANY
9555 W. Irving Park Rd.
Schiller Park, IL 60176
www.arpac.com

| | | |
|---|---|---|
| MODEL | FILE \ CONFIG | 372287\372287 |
| | SIMILAR TO | |
| | DATE CREATED | Monday, July 9, 2012 12:39:42 PM |
| | DATE UPDATED | Thursday, October 15, 2020 3:47:20 PM |
| | UPDATED BY | sarcher |
| DRAFT | DATE CREATED | Wednesday, February 28, 2018 4:49:15 PM |
| | DATE UPDATED | Thursday, October 15, 2020 3:48:48 PM |
| | UPDATED BY | sarcher |

SIZE: B
SCALE: 1:20
3RD ANGLE
UNITS: INCH
TOLERANCES
X/X: ±1/32
X.XX: ±.015
X.XXX: ±.005
ANGLES: ±1°

MATERIAL: SEE BILL OF MATERIALS
FINISH: PART OF ASSEMBLY

DESCRIPTION: ASSY, CONV, LONG, DIVIDER, DYNAMIC
NUMBER: 372287

"C:\ARPAC_VAULT\Designs_CORRUGATED\TS-2300\17766\372287.slddrw" accessed Thursday, October 15, 2020.

ARPAC B SIZE FORMAT R5.1

| BILL OF MATERIALS | | | |
|---|---|---|---|
| ITEM | QTY | NUMBER | DESCRIPTION |
| 1 | 1 | 372308 | SHAFT, IDLER, CONV, INFEED |
| 2 | 2 | 828156 | FTG, GREASE, STRAIGHT, SS, 1/4-28 |
| 3 | 1 | 372307 | BEARING SUPPORT |
| 4 | 1 | 372307-001 | BEARING SUPPORT |
| 5 | 2 | 810473 | BRG, CART, 1/2 X 1-1/8 X 5/16 LG, SS,DOUBLE SEALED |

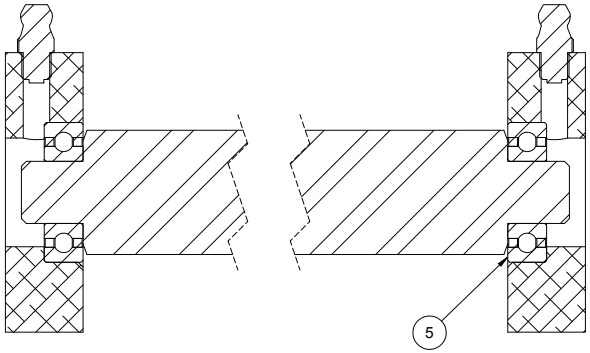


SECTION B-B

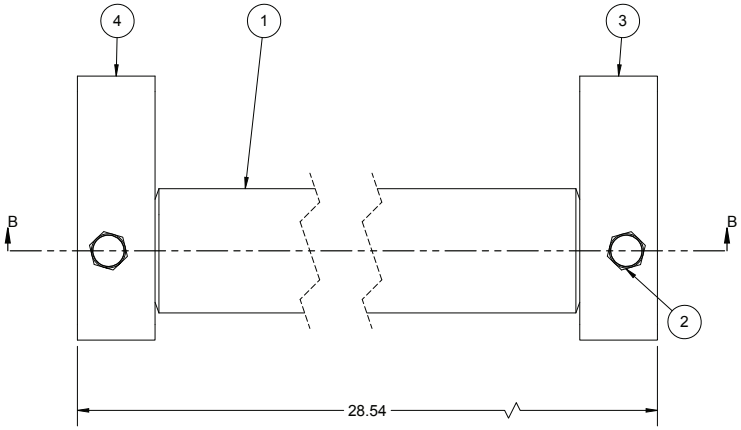


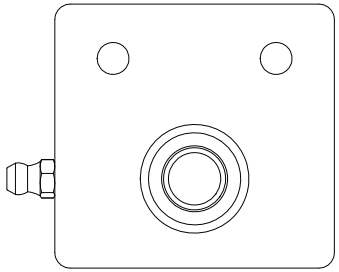

| REV | DATE | BY | NOTE |
|---|---|---|---|
| REVISIONS | | | |

NOTES
- INTERPRET PER ASME Y14.5M-1994.
- DIMENSIONS ARE IN INCHES [mm].
- DIMENSIONS IN PARENTHESES FOR REFERENCE ONLY.
- BREAK SHARP EDGES AND CORNERS.
- PROPRIETARY NOTICE: THIS INFORMATION IS THE PROPERTY OF ARPAC LLC AND SHALL NOT BE USED FOR ANY PURPOSE OTHER THAN THAT FOR WHICH IT WAS OBTAINED.
- CREATED IN SOLIDWORKS 2018.

CREATED IN SOLIDWORKS 2018

ARPAC A DURAVANT COMPANY
9555 W. Irving Park Rd.
Schiller Park, IL 60176
www.arpac.com

| | | |
|---|---|---|
| MODEL | FILE \ CONFIG | 372306\372306 |
| | SIMILAR TO | -- |
| | DATE CREATED | Thursday, July 16, 2020 2:56:49 PM |
| | DATE UPDATED | Friday, July 24, 2020 4:31:27 PM |
| | UPDATED BY | jw |
| DRAFT | DATE CREATED | Monday, July 20, 2020 8:50:53 AM |
| | DATE UPDATED | Friday, July 24, 2020 4:31:27 PM |
| | UPDATED BY | jw |

SIZE: B
SCALE: 1:1
3RD ANGLE
UNITS: INCH
TOLERANCES
X/X: ±1/32
X.XX: ±.015
X.XXX: ±.005
ANGLES: ±1°

MATERIAL: SEE BILL OF MATERIALS
FINISH: PART OF ASSEMBLY

DESCRIPTION: ASSY, ROLLER, NOSE
NUMBER: 372306

"C:\ARPAC_VAULT\Designs_CORRUGATED\TS-2300\17766\372306.slddrw" accessed Monday, August 10, 2020.

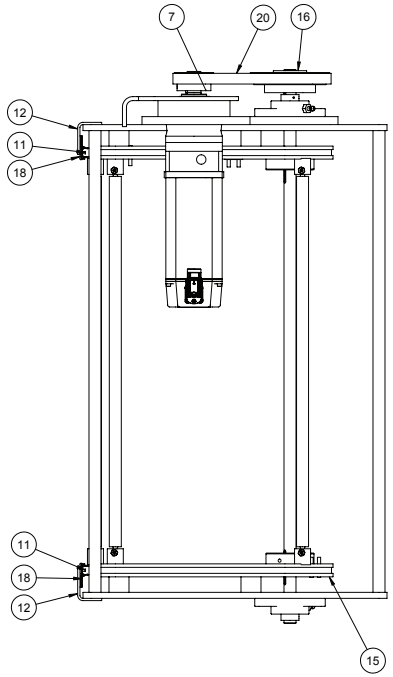


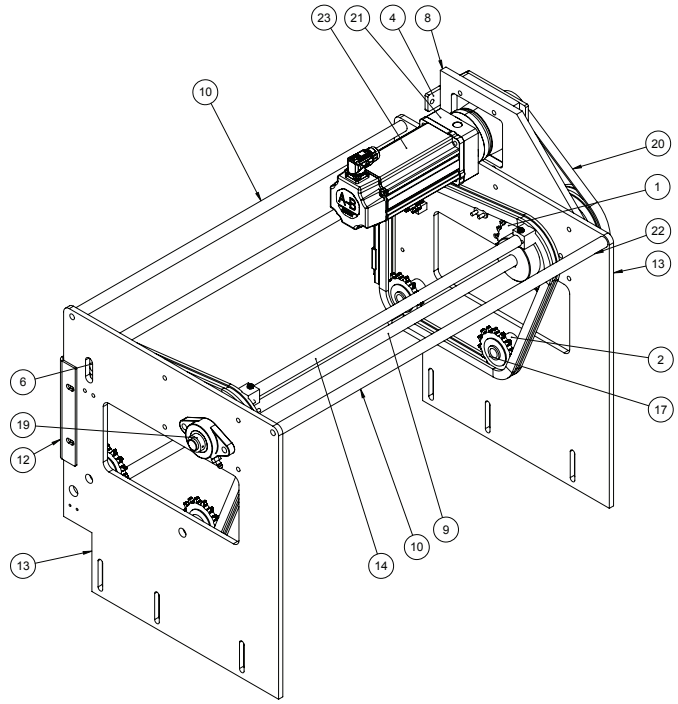


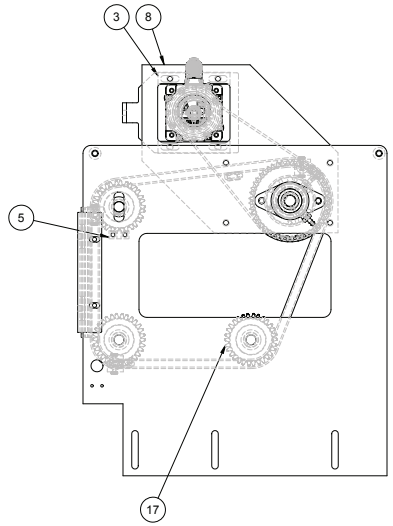


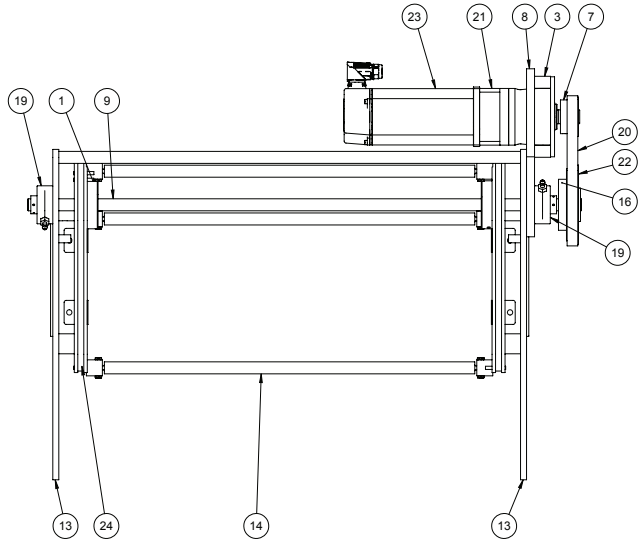


BILL OF MATERIALS

| ITEM | QTY | NUMBER | DESCRIPTION |
|---|---|---|---|
| 1 | 2 | 101931 | SPKT, 50B24, MOD, 0.750 BORE |
| 2 | 4 | 224000-018 | SPCR, AL, 21/32 ID X 1-1/4 OD, 1.016 LG |
| 3 | 2 | 265558 | SPACER, BKT, MTG, SERVO |
| 4 | 1 | 265560 | BKT, MTG, GEARBOX |
| 5 | 2 | 265572 | BLK, TENSIONER |
| 6 | 2 | 265580 | SPCR, AL, 21/32 ID X 1 1/4 OD |
| 7 | 1 | 311856 | PULLEY, TIMING, 25T, MOD, 22MM BORE |
| 8 | 1 | 311892 | BKT, MTG, SERVO, SCAPEMENT |
| 9 | 1 | 313299 | SHAFT, DRIVE, ESCAPEMENT |
| 10 | 2 | 314897 | SHAFT, 0.750, TAPPED, 3/8-16 |
| 11 | 2 | 345119 | RAIL, GUIDE, CHAIN, #50, SS, 8.13" LG. |
| 12 | 2 | 357531 | ANGLE, MTG, RAIL, CHAIN |
| 13 | 2 | 372438 | PLT, SIDE, BAR, FLIGHT, ESCAPEMENT |
| 14 | 3 | 374154 | ASSY, BAR, FLIGHT, RELEASE, QUICK |
| 15 | 2 | 800472 | CHAIN, RLR, #50, HOLLOW PIN |
| 16 | 1 | 800663 | BUSH, TAPER, QD, 3/4 BORE X 1-3/8 LG |
| 17 | 6 | 800905 | SPKT, 50BB15H, IDLER, 5/8 ID, HARDENED TEETH |
| 18 | 4 | 801359 | CLAMP, RAIL, SINGLE, 1.5 LG, SS, ROUND HOLE |
| 19 | 2 | 826966 | BRG, FLG, 3/4 ID, 2-BOLT, 3.53 MTG HOLES |
| 20 | 1 | 841291 | BELT, TIMMING, 8MM P, 16MM W, 25.2 LG, 80 TEETH, EAGLE PD, HELICAL OFFSET TEETH |
| 21 | 1 | 848475 | GEARBOX, PLANETARY, NP SERIES, 10:1, FOR MPL-B310P |
| 22 | 1 | 849289 | PULLEY, TIMING, 50T, 8 MM P, 17 MM W, SDS BORE |
| 23 | 1 | 849460 | MOTOR, SERVO, 37 IN-LB, 4750 RPM, 460VAC, W/BRAKE,KINETIX 5000 CONTROLLER |
| 24 | 4 | 869213 | LINK, CHAIN, 50 D-3 |

#50 HOLLOW PIN CHAIN 47.5" LENGTH EACH SIDE
FLIGHT BAR PITCH = 23.75"
GEARBOX RATIO = 10
PULLEY RATIO = 2
CHAIN DRIVE SPROCKET IS 24 TEETH
31.66 SERVOMOTOR REVOLUTION = 1 FLIGHT BAR PITCH (23.75")
1 MOTOR REVOLUTION = .75 FLIGHT BAR TRAVEL

| REV | DATE | BY | NOTE |
|---|---|---|---|

REVISIONS

NOTES
- INTERPRET PER ASME Y14.5M-1994.
- DIMENSIONS ARE IN INCHES [mm].
- DIMENSIONS IN PARENTHESES FOR REFERENCE ONLY.
- BREAK SHARP EDGES AND CORNERS.
- PROPRIETARY NOTICE: THIS INFORMATION IS THE PROPERTY OF ARPAC LLC AND SHALL NOT BE USED FOR ANY PURPOSE OTHER THAN THAT FOR WHICH IT WAS OBTAINED.
- CREATED IN SOLIDWORKS 2018.

CREATED IN SOLIDWORKS 2018

ARPAC A DURAVANT COMPANY
9555 W. Irving Park Rd.
Schiller Park, IL 60176
www.arpac.com

MODEL
FILE \ CONFIG: 372332\372332-001
SIMILAR TO: --
DATE CREATED: Wednesday, September 10, 2014 11:19:27 AM
DATE UPDATED: Friday, April 16, 2021 6:50:22 AM
UPDATED BY: jmeintz

DRAFT
DATE CREATED: Monday, July 27, 2020 9:44:36 AM
DATE UPDATED: Tuesday, April 27, 2021 10:10:52 AM
UPDATED BY: sarcher

SIZE: C
SCALE: 1:6
3RD ANGLE
UNITS: INCH
TOLERANCES
X/X: ±1/32
X.XX: ±.015
X.XXX: ±.005
ANGLES: ±1°

MATERIAL: SEE BILL OF MATERIALS
FINISH: PART OF ASSEMBLY

DESCRIPTION: ASSY, BAR, FLIGHT, ESCAPEMENT, 28.86" WIDE, 23.75" PITCH QR PINS
NUMBER: 372332-001

ARPAC B SIZE FORMAT R5.1

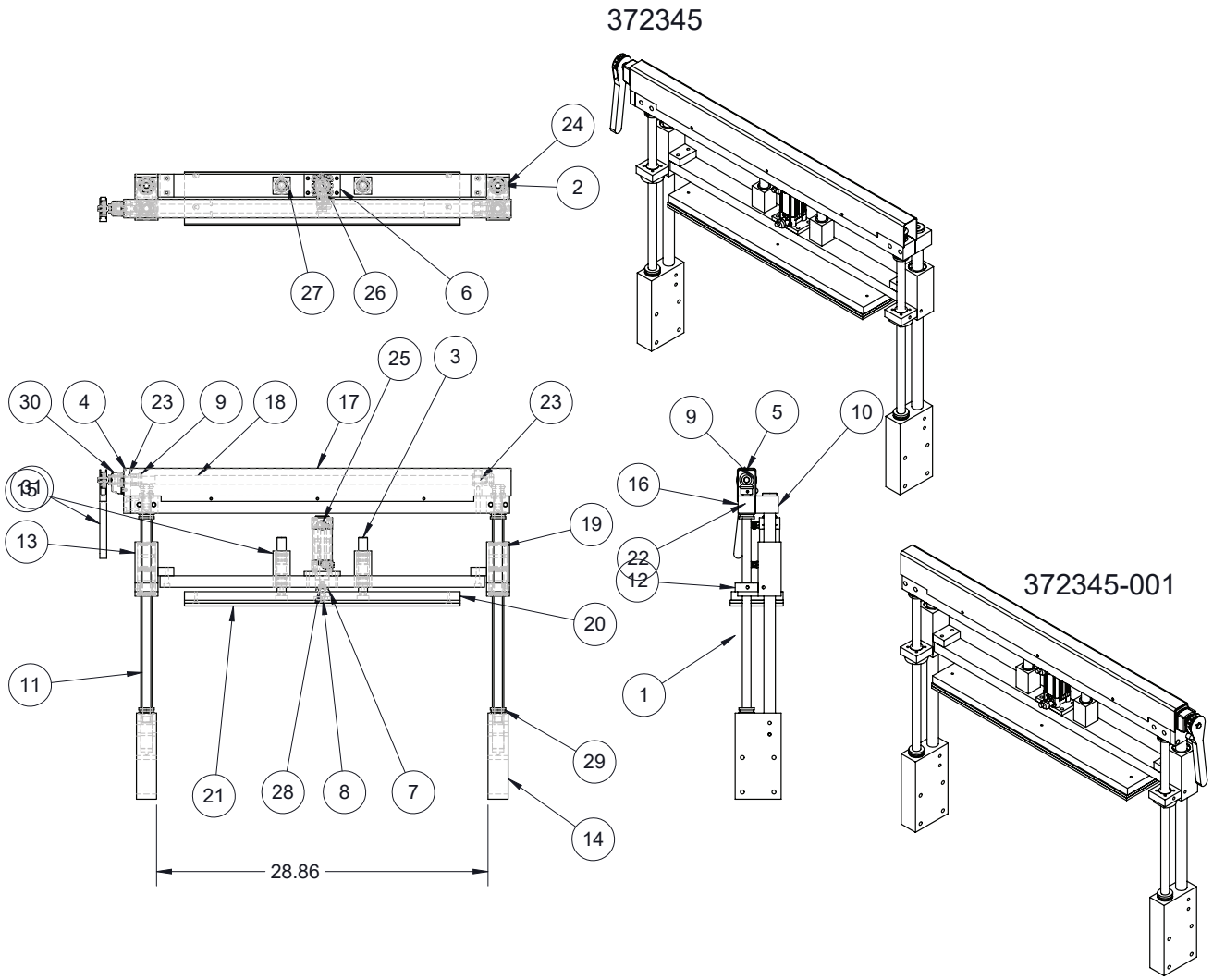


| BILL OF MATERIALS | | | |
|---|---|---|---|
| ITEM | QTY | NUMBER | DESCRIPTION |
| 1 | 2 | 300306 | NUT, FLANGE |
| 2 | 2 | 300314 | WASHER, CLAMP |
| 3 | 2 | 300317 | SHAFT, GUIDE |
| 4 | 1 | 300322 | PLT, MTG, SHAFT |
| 5 | 1 | 300323 | PLT, MTG, SHAFT |
| 6 | 1 | 300326 | PLT, MTG, CYL |
| 7 | 1 | 300711 | NUT, FLOATING |
| 8 | 1 | 300712 | NUT SPECIAL |
| 9 | 4 | 309590 | GEAR, MITER, 12DP, 15T, 0.50B |
| 10 | 2 | 309593 | BLK, MTG, SHAFT |
| 11 | 2 | 309594 | SCREW, ADJ, VERT |
| 12 | 1 | 309597 | WLDMNT, BLK, ADJ. VERT |
| 13 | 1 | 309597-001 | WLDMNT, BLK, ADJ. VERT |
| 14 | 2 | 311965 | BLK, MTG, CLAMP |
| 15 | 1 | 313273 | WLDMNT, BAR, MTG, CYL |
| 16 | 1 | 313274 | BAR, CROSS, TOP |
| 17 | 1 | 313275 | COVER, TOP |
| 18 | 1 | 313276 | SHAFT, CROSS, ADJ. |
| 19 | 2 | 313279 | SHAFT, SLIDE |
| 20 | 1 | 372346 | PLT, CLAMP, PRODUCT |
| 21 | 1 | 372347 | SUBASSY, PLT, CLAMP, RUBBER, EXT |
| 22 | 6 | 800366 | BUSH, OILITE, 0.6260 X 0.7530 X 1/2 LG |
| 23 | 2 | 806159 | BUSH, OILITE, FLG, 0.502 X 0.753 X 5/8, 1 OD X 1/8 THK FLG |
| 24 | 4 | 819834 | BUSH, BALL, 1 X 1-9/16 X 2-1/4 LG WITH TWO INTEGRAL WIPWERS |
| 25 | 2 | 825362-001 | VALVE, CONTROL, FLOW, 1/8 NPT X 1/4 TUBE 90DEG, NUMERIC INDICATOR, MTR OUT |
| 26 | 1 | 828032 | SENSOR, AIR CYLINDER |
| 27 | 4 | 846871 | BRG, LINEAR, BALL, ID20MM, OD28MM, L30MM |
| 28 | 1 | 847969 | CYL, AIR, 32mm BORE, 25mm STROKE |
| 29 | 4 | 848781 | BRG, THRUST, BALL, 5/8 ID, 1-11/32 OD, 9/16 TALL |
| 30 | 1 | 848782 | COUNTER, DIGITAL, 1/2 HOLLOW BORE, CW, 25 COUNTS/TURN, UPSIDE DOWN |
| 31 | 1 | 849178 | WRENCH, RATCHET 3/8 SQ X 6-15/16 LG |

NOTES
- INTERPRET PER ASME Y14.5M-1994.
- DIMENSIONS ARE IN INCHES [mm].
- DIMENSIONS IN PARENTHESES FOR REFERENCE ONLY.
- BREAK SHARP EDGES AND CORNERS.
- PROPRIETARY NOTICE: THIS INFORMATION IS THE PROPERTY OF ARPAC LLC AND SHALL NOT BE USED FOR ANY PURPOSE OTHER THAN THAT FOR WHICH IT WAS OBTAINED.
- CREATED IN SOLIDWORKS 2018.

CREATED IN SOLIDWORKS 2018

ARPAC A DURAVANT COMPANY
9555 W. Irving Park Rd.
Schiller Park, IL 60176
www.arpac.com

| | | |
|---|---|---|
| MODEL | FILE \ CONFIG | 372345\372345 |
| | SIMILAR TO | -- |
| | DATE CREATED | Thursday, June 12, 2014 11:15:32 AM |
| | DATE UPDATED | Friday, April 9, 2021 1:21:52 PM |
| | UPDATED BY | jmeintz |
| DRAFT | DATE CREATED | Tuesday, February 10, 2015 4:26:35 PM |
| | DATE UPDATED | Monday, August 10, 2020 3:41:13 PM |
| | UPDATED BY | jw |

SIZE: B
SCALE: 1:10
3RD ANGLE
UNITS: INCH
TOLERANCES
X/X: ±1/32
X.XX: ±.015
X.XXX: ±.005
ANGLES: ±1°

MATERIAL: SEE BILL OF MATERIALS
FINISH: PART OF ASSEMBLY

DESCRIPTION: ASSY, CLAMP, PRODUCT, COLLATOR, 28.858" W CONV
NUMBER: 372345

"C:\nVenia_Vault\Designs_CORRUGATED\TS-2300\17766\372345.slddrw" accessed Monday, May 3, 2021.

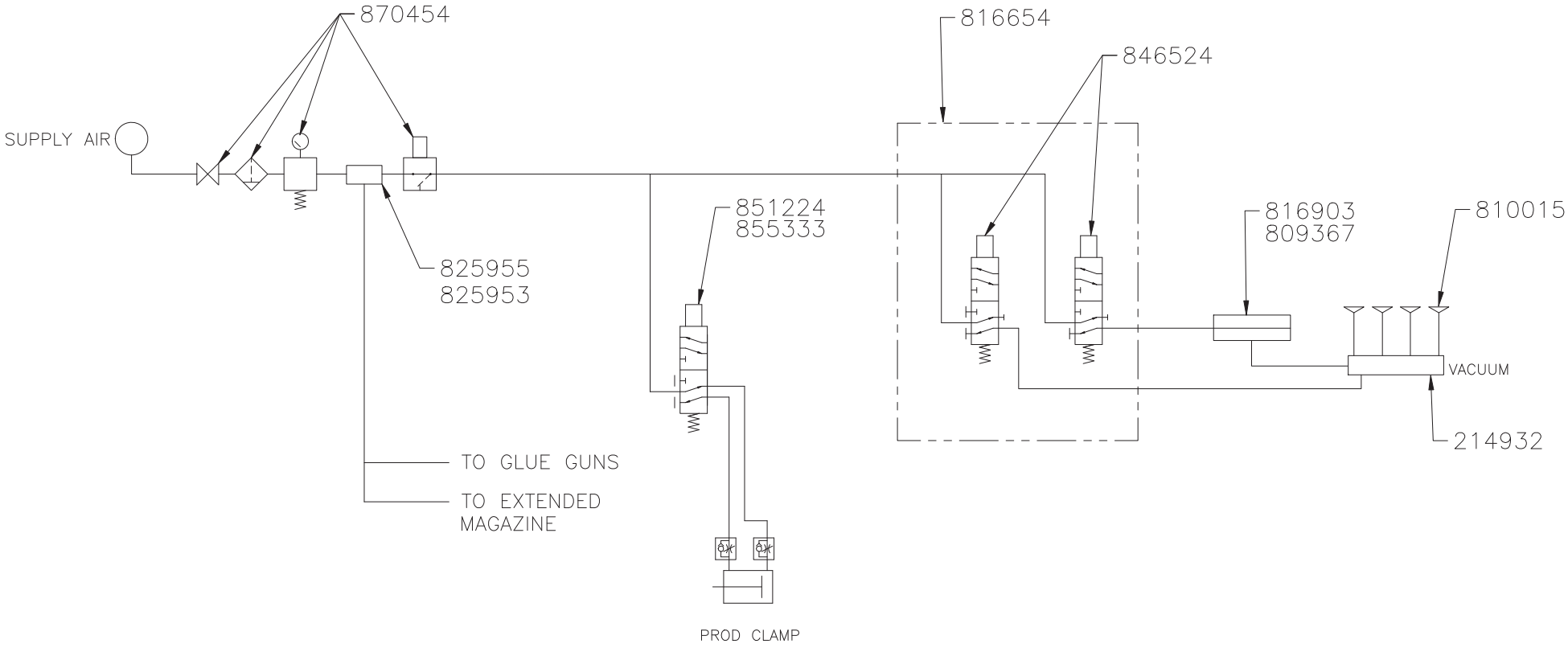


**ARPAC**
9511 WEST RIVER ST.
SCHILLER PARK, IL 60176

| UNLESS OTHERWISE SPECIFIED ALL DIMENSIONAL TOLERANCES: | | |
|---|---|---|
| | FRACTIONS | ± 1/64 |
| | TWO (2) DECIMALS | ± 0.010 |
| | THREE (3) DECIMALS | ± 0.005 |
| | ANGLES | ± 0.5° |

| | | | | | | |
|---|---|---|---|---|---|---|
| DRAWN: | 8/27/2020 | BY: | SRA | SCALE: | NONE | SIZE: B |
| RELEASED: | | FILENAME: | 372650 | APPROVED BY: | | |

DESCRIPTION: SCHEMATIC, PNEUMATIC, VACUUM

24VDC, TS-2300

DRAWING NUMBER: 372650

ARPAC B SIZE FORMAT R5.1

| BILL OF MATERIALS | | | |
|---|---|---|---|
| ITEM | QTY | NUMBER | DESCRIPTION |
| 1 | 1 | 372970 | WLDMT, PLT, DEAD, TRANSFER, PRODUCT |
| 2 | 1 | 372971 | PLT, BASE, BAR, FLIGHT, PACING |
| 3 | 1 | 372972 | PLT, DEAD, BAR, FLIGHT, PACING |
| 4 | 1 | 333728 | BAR, SUPPORT, PLATE, DEAD |
| 5 | 2 | 212436 | BKT |
| 6 | 2 | 212469 | ANGLE |
| 7 | 2 | 304538 | ANGLE, UPPER DEFLECTOR, MTG |

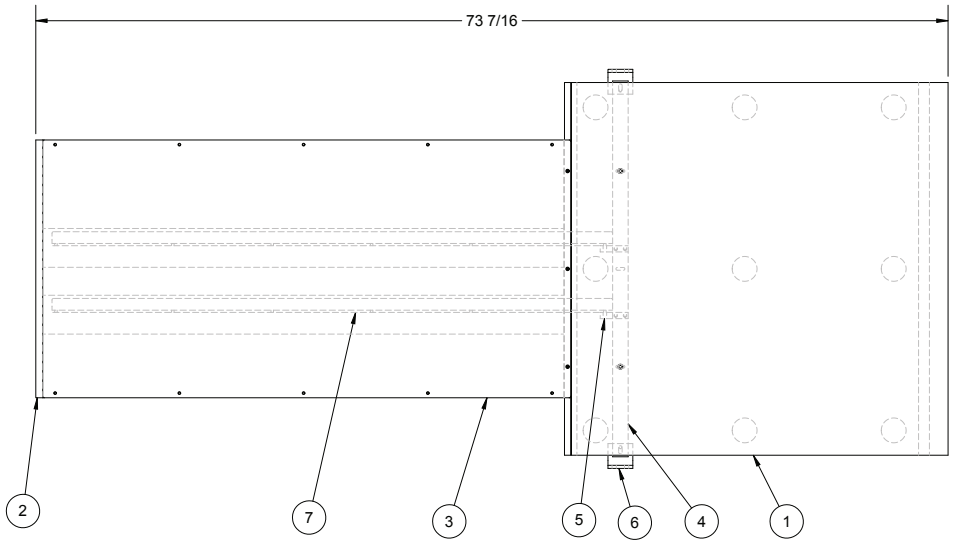


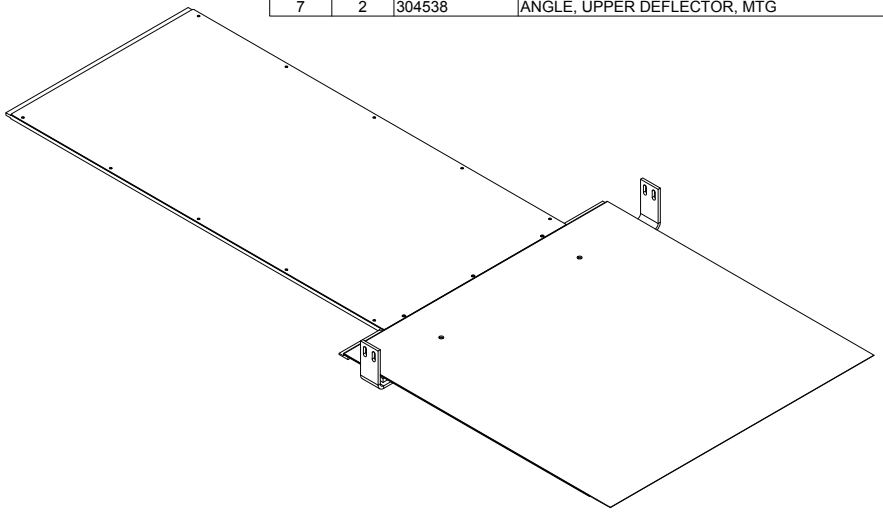

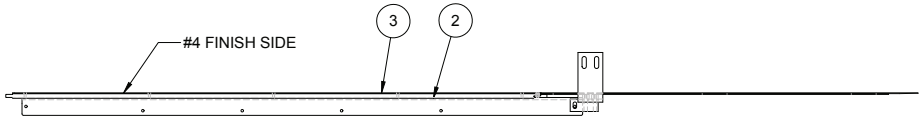


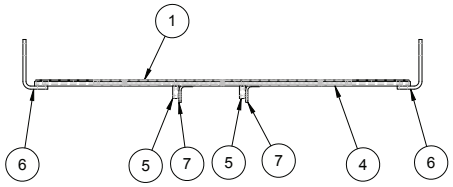


| REV | DATE | BY | NOTE |
|---|---|---|---|
| REVISIONS | | | |

NOTES
- INTERPRET PER ASME Y14.5M-1994.
- DIMENSIONS ARE IN INCHES [mm].
- DIMENSIONS IN PARENTHESES FOR REFERENCE ONLY.
- BREAK SHARP EDGES AND CORNERS.
- PROPRIETARY NOTICE: THIS INFORMATION IS THE PROPERTY OF ARPAC LLC AND SHALL NOT BE USED FOR ANY PURPOSE OTHER THAN THAT FOR WHICH IT WAS OBTAINED.
- CREATED IN SOLIDWORKS 2018.

CREATED IN SOLIDWORKS 2018

ARPAC A DURAVANT COMPANY
9555 W. Irving Park Rd.
Schiller Park, IL 60176
www.arpac.com

| | | |
|---|---|---|
| MODEL | FILE \ CONFIG | 372973\Default |
| | SIMILAR TO | -- |
| | DATE CREATED | Monday, December 28, 2020 11:27:45 AM |
| | DATE UPDATED | Monday, December 28, 2020 12:41:27 PM |
| | UPDATED BY | sarcher |
| DRAFT | DATE CREATED | Monday, December 28, 2020 12:45:22 PM |
| | DATE UPDATED | Friday, January 22, 2021 1:24:31 PM |
| | UPDATED BY | sarcher |

| SIZE | SCALE | MATERIAL | DESCRIPTION |
|---|---|---|---|
| B | 1:10 | SEE BILL OF MATERIALS | ASSY, PLT, DEAD |
| 3RD ANGLE | UNITS | | |
| | INCH | | |
| TOLERANCES | | FINISH | NUMBER |
| X/X: ±1/32<br>X.XX: ±.015<br>X.XXX: ±.005<br>ANGLES: ±1° | | NONE | 372973 |

"C:\ARPAC_VAULT\Designs_CORRUGATED\TS-2300\17766\372973.slddrw" accessed Friday, January 22, 2021.

ARPAC C SIZE FORMAT R5.1

| BILL OF MATERIALS | | | |
|---|---|---|---|
| ITEM | QTY | NUMBER | DESCRIPTION |
| 1 | 1 | 121454-002 | SHAFT, HANGER, 31.25 LG |
| 2 | 1 | 121454-035 | SHAFT, HANGER, 30.8044 LG |
| 3 | 1 | 121454-042 | SHAFT, HANGER, 20.69 LG |
| 4 | 3 | 228692 | ASSY, HANDLE, NUT |
| 5 | 2 | 306497 | PLT, STOP, SPACER |
| 6 | 2 | 307084 | BLK, MTG, GUIDE` |
| 7 | 1 | 328579 | SHAFT, HANGER, 3" LG |
| 8 | 1 | 372354-001 | BAR, MTG, SIDE, GUIDE, LANE |
| 9 | 1 | 372354-002 | BAR, MTG, SIDE, GUIDE, LANE |
| 10 | 2 | 374175 | GUIDE, LANE, INFEED, |
| 11 | 1 | 374162-001 | GUIDE, LANE, INFEED, |
| 12 | 1 | 374162-002 | GUIDE, LANE, INFEED, |
| 13 | 1 | 374162-004 | GUIDE, LANE, INFEED, |
| 14 | 1 | 374164 | BAR, SUPPORT, GUIDE |
| 15 | 2 | 374173 | BAR, MTG, SIDE, GUIDE, LANE |
| 16 | 2 | 374173-001 | BAR, MTG, SIDE, GUIDE, LANE |

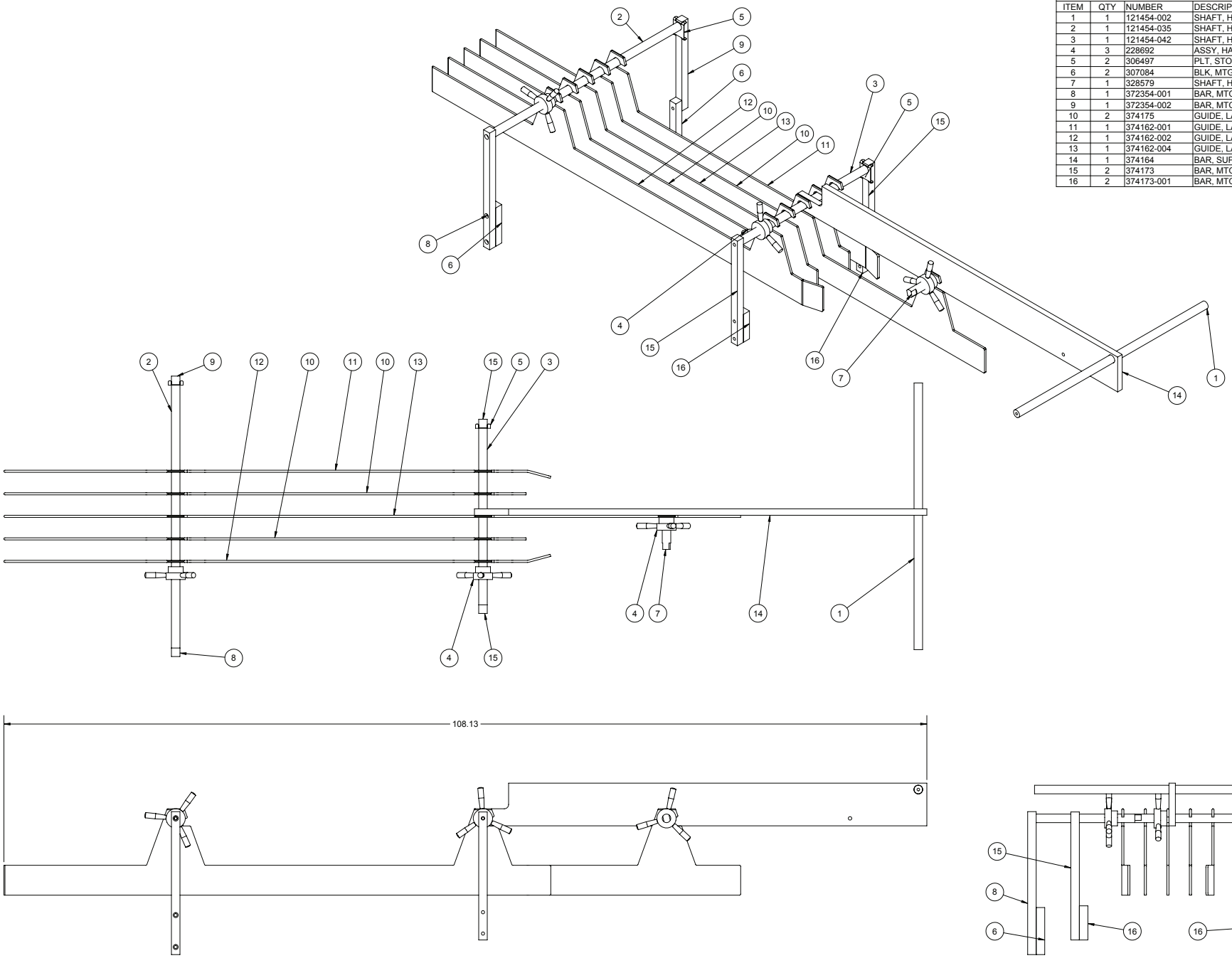


| REV | DATE | BY | NOTE |
|---|---|---|---|
| REVISIONS | | | |

NOTES
- INTERPRET PER ASME Y14.5M-1994.
- DIMENSIONS ARE IN INCHES [mm].
- DIMENSIONS IN PARENTHESES FOR REFERENCE ONLY.
- BREAK SHARP EDGES AND CORNERS.
- PROPRIETARY NOTICE: THIS INFORMATION IS THE PROPERTY OF ARPAC LLC AND SHALL NOT BE USED FOR ANY PURPOSE OTHER THAN THAT FOR WHICH IT WAS OBTAINED.
- CREATED IN SOLIDWORKS 2018.

CREATED IN SOLIDWORKS 2018

ARPAC A DURAVANT COMPANY
9555 W. Irving Park Rd.
Schiller Park, IL 60176
www.arpac.com

| MODEL | |
|---|---|
| FILE \ CONFIG | 374148\355 ML CANS -- |
| SIMILAR TO | |
| DATE CREATED | Thursday, October 11, 2012 4:41:49 PM |
| DATE UPDATED | Thursday, April 15, 2021 12:51:34 PM |
| UPDATED BY | jmeintz |

| DRAFT | |
|---|---|
| DATE CREATED | Thursday, April 8, 2021 9:15:59 AM |
| DATE UPDATED | Tuesday, April 27, 2021 9:39:44 AM |
| UPDATED BY | sarcher |

| SIZE | SCALE |
|---|---|
| C | 1:8 |
| 3RD ANGLE | UNITS |
| | INCH |

TOLERANCES
X/X: ±1/32
X.XX: ±.015
X.XXX: ±.005
ANGLES: ±1°

MATERIAL: SEE BILL OF MATERIALS

FINISH: NONE

DESCRIPTION: ASSY, LANE GUIDE, 4 LANES, LOOSE CANS

NUMBER: 374148

"C:\nVenia_Vault\Designs\370000\374000\374148.slddrw" accessed Tuesday, April 27, 2021.

SHEET 1 OF 1

ARPAC D SIZE FORMAT REV. 1

| BILL OF MATERIALS | | | |
|---|---|---|---|
| ITEM | QTY | NUMBER | DESCRIPTION |
| 1 | 1 | 101838 | SPKT, 50B13, MOD, 1.000 BORE |
| 2 | 1 | 212470 | BRACKET |
| 3 | 1 | 384759 | BAR, SUPPORT, PLT, DEAD |
| 4 | 2 | 226432-004 | SPACER, 1 1/2 DIA, 3/8-16 THREAD |
| 5 | 2 | 230356 | BKT, SUPPORT |
| 6 | 1 | 282655 | BKT, MNT, DEAD PLT |
| 7 | 2 | 285192 | SPCR, AL 13/32 ID 1 1/4 OD |
| 8 | 2 | 300344 | BEARING SUPPORT |
| 9 | 1 | 316168-006 | SHAFT, IDLER, CONV, INFEED |
| 10 | 1 | 369809 | PLT, DEAD |
| 11 | 1 | 369812-001 | SHAFT, DRIVE, CONVEYOR |
| 12 | 2 | 374149 | RAIL, GUIDE, TEE, 1.0 X 0.38 L-SHAPE,8' SS |
| 13 | 1 | 374151 | FRAME, CONV, INFEED, 21"W, TS-2300 |
| 14 | 7 | 374153 | SHAFT, ROLLER, IDLER,18.48 LG |
| 15 | 1 | 374157 | BRKT FBAR ESCAPEMENT |
| 16 | 1 | 374157-001 | BRKT FBAR ESCAPEMENT L |
| 17 | 4 | 374172 | RAIL, GUIDE, TEE, 1.60 W, 8' LG, SS |
| 18 | 2 | 801292-002 | RAIL, GUIDE, TEE, 1.0 X 0.38 L-SHAPE,8' SS |
| 19 | 4 | 801296-001 | RAIL, GUIDE, TEE, 1.60 W, 8' LG, SS |
| 20 | 48 | 801359 | CLAMP, RAIL, SINGLE, 1.5 LG, SS, ROUND HOLE |
| 21 | 5 | 806043 | SPKT, 12T, 1-1/2 SQ BORE, 4.1 PD, ACETAL |
| 22 | 2 | 807514 | RING, SNAP, EXTERNAL, 2 1/16" SHAFT, SS |
| 23 | 2 | 810473 | BRG, CART, 1/2 X 1-1/8 X 5/16 LG, SS,DOUBLE SEALED |
| 24 | 25 | 821639 | BELT, ACETAL, BLUE, RAISED RIB, 17.2"W (FT) |
| 25 | 7 | 822598 | ROLLER, SUPPORT, APS-18 |
| 26 | 1 | 827116 | BRG, FLG, 1 ID, 2-BOLT, 3.89 BOLT CNTRS |
| 27 | 2 | 828156 | FTG, GREASE, STRAIGHT, SS, 1/4-28 |
| 28 | 2 | 837218 | BRG, FLG, 1 ID, 3-BOLT, STD DUTY |
| 29 | 3 | 851050 | FINGER TRANSFER PLATE, TWO MATERIAL, STANDARD FINGER, 400 SERIES, WITH ACCESSORIES |
| 30 | 14 | 872416 | SPACER, NYLON, .505 ID, .250 THK 94639A264 |
| 31 | 2 | 374163 | PLT, CONNECTION, CONV |

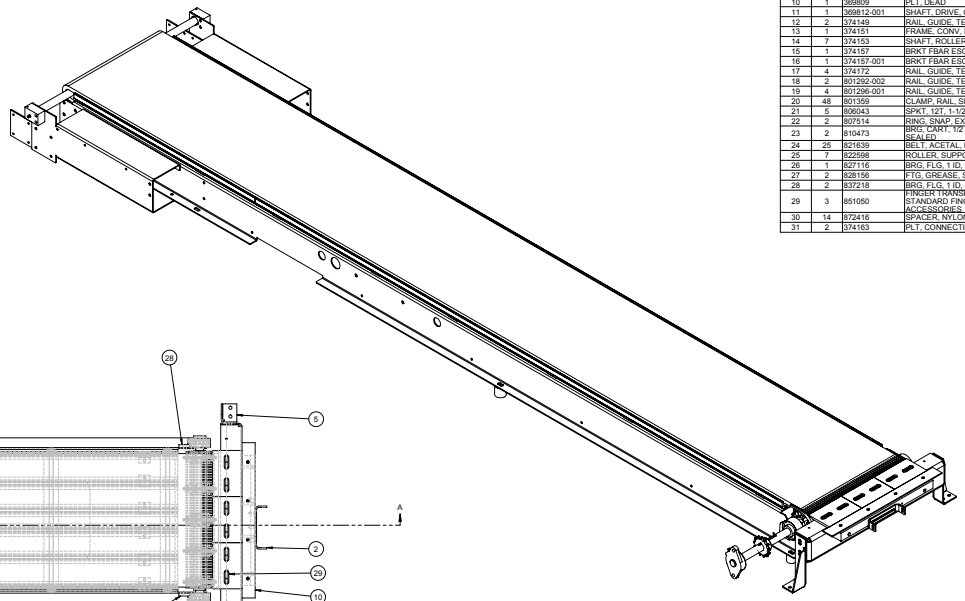

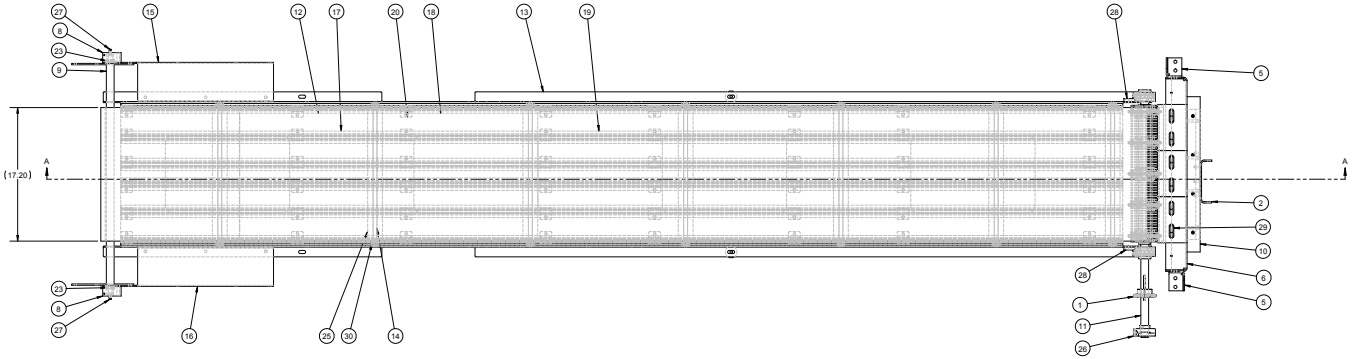


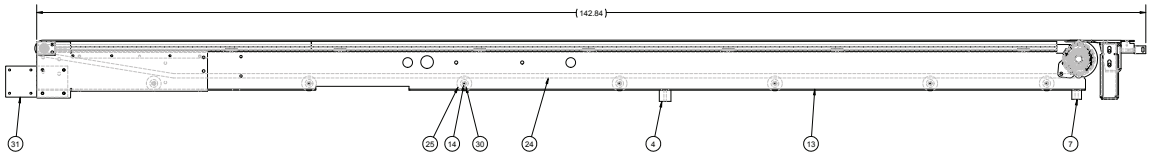


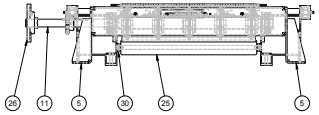

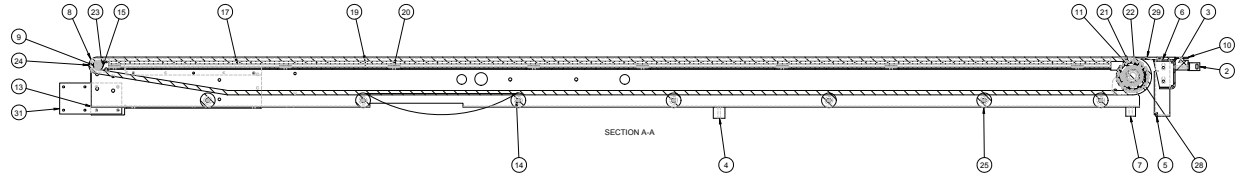


| REV | DATE | BY | NOTE |
|---|---|---|---|
| REVISIONS | | | |

NOTES
- INTERPRET PER ASME Y14.5M-1994.
- DIMENSIONS ARE IN INCHES [mm].
- DIMENSIONS IN PARENTHESES FOR REFERENCE ONLY.
- BREAK SHARP EDGES AND CORNERS.
- PROPRIETARY NOTICE: THIS INFORMATION IS THE PROPERTY OF ARPAC LLC AND SHALL NOT BE USED FOR ANY PURPOSE OTHER THAN THAT FOR WHICH IT WAS OBTAINED.
- CREATED IN SOLIDWORKS 2018.

CREATED IN SOLIDWORKS 2018

| | | |
|---|---|---|
| S | FILE \ CONFIG | 374150\374150 |
| S | SIMILAR TO | |
| S | DATE CREATED | Monday, December 23, 2019 11:38:19 AM |
| S | DATE UPDATED | Friday, October 22, 2021 10:29:04 AM |
| S | UPDATED BY | searcher |
| S | DATE CREATED | Wednesday, April 7, 2021 11:21:51 AM |
| S | DATE UPDATED | Friday, October 22, 2021 10:31:51 AM |
| S | UPDATED BY | searcher |

ARPAC
A DEXTERITY COMPANY
8893 W. Irving Park Rd.
Schiller Park, IL 60176
www.arpac.com

| SIZE | SCALE | MATERIAL | DESCRIPTION |
|---|---|---|---|
| D | 1:8 | SEE BILL OF MATERIALS | ASSY, CONV, INFEED, 17"W, TS-2300 |
| 3RD ANGLE | UNITS | | |
| | INCH | | |
| TOLERANCES: X.XX: ±1/32 X.XX: ±.015 X.XXX: ±.005 ANGLES: ±1° | FINISH: NONE | | NUMBER: 374150 |

"C:\mVenia_Vault\Designs_CORRUGATED\TS-2300\842\374150.sldprt" accessed Friday, October 22, 2021.

SHEET 1 OF 1

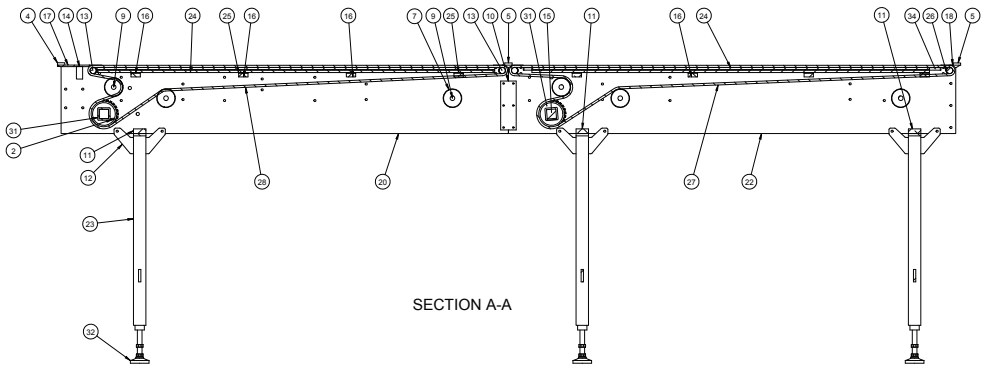

SECTION A-A

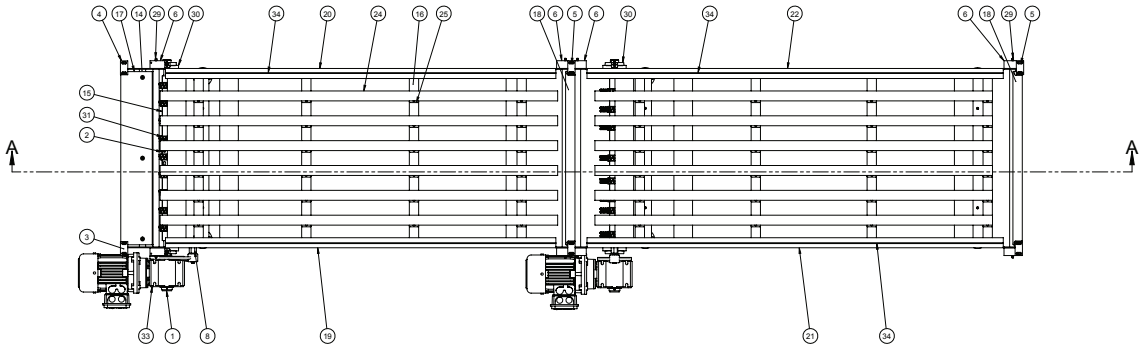

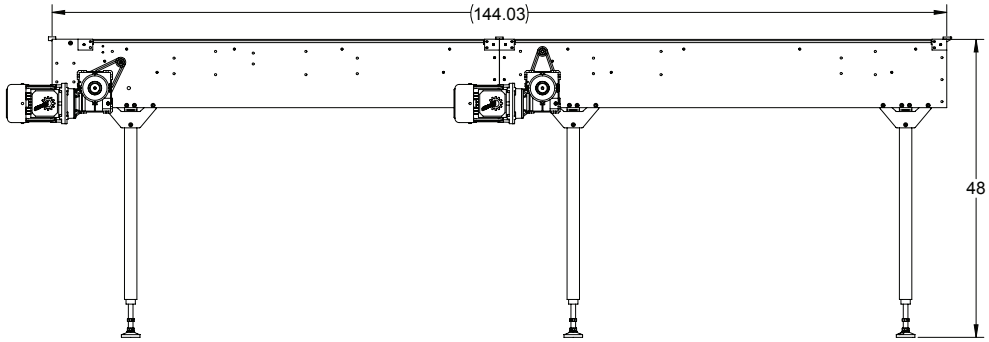


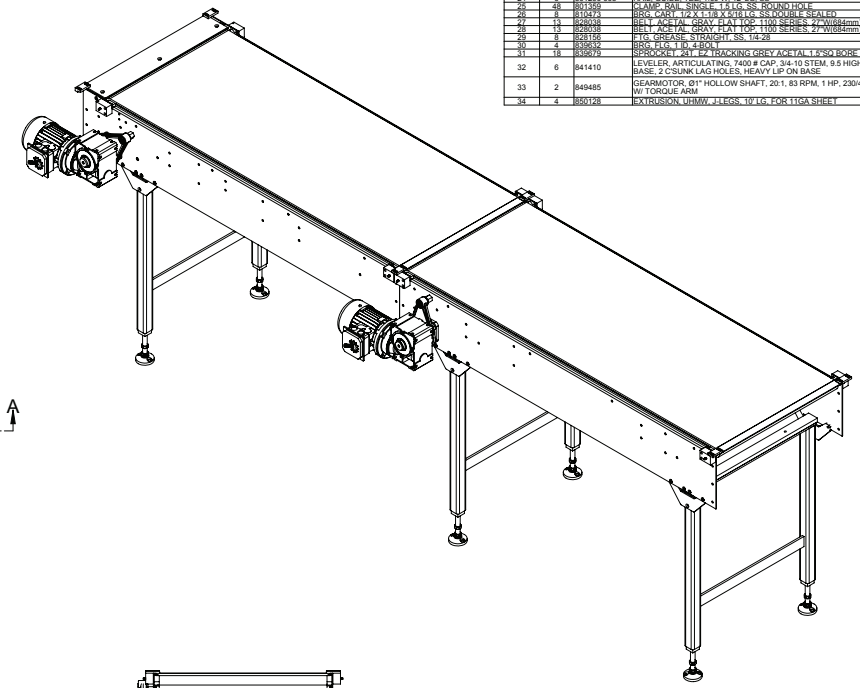

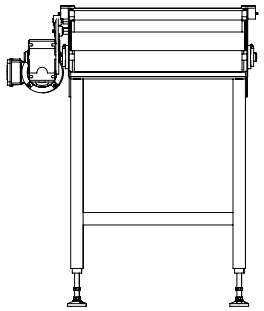

BILL OF MATERIALS

| ITEM | QTY | NUMBER | DESCRIPTION |
|---|---|---|---|
| 1 | 2 | 283569 | WSHR, SPECIAL |
| 2 | 6 | 288168 | STOP, PINION, CENTRAL |
| 3 | 1 | 288174-001 | SUPPORT, PLT, TRANSFER R |
| 4 | 1 | 288174-002 | SUPPORT, PLT, TRANSFER L |
| 5 | 4 | 300336 | SUPPORT, PLT, TRANSFER |
| 6 | 8 | 300344 | BEARING SUPPORT |
| 7 | 6 | 300373 | DEFLECTION ROLLER |
| 8 | 2 | 300302 | PIN, HOLDING, TORQUE ARM |
| 9 | 8 | 309972-009 | SHAFT, ROLER |
| 10 | 2 | 315002 | PLT, CONNECTING, CONV, DIVIDER, DYNAMIC, CSINK |
| 11 | 3 | 315002-003 | CROSSBAR, INTERMEDIATE, CSINK |
| 12 | 8 | 315016 | PLT, STIFF |
| 13 | 4 | 316168-006 | SHAFT, IDLER, CONV, INFEED |
| 14 | 1 | 343972 | BAR, SUPPORT, PLT, DEAD |
| 15 | 2 | 345145 | SHAFT, DRIVE, SQ, CONVEYOR, 1" DIA |
| 16 | 8 | 345146 | CROSSBAR, INTERMEDIATE |
| 17 | 1 | 345175 | PLT, DEAD CLAMP, PRODUCT |
| 18 | 2 | 389518 | BAR, TRANSFER, PRODUCT |
| 19 | 1 | 374155 | PLT, SIDE, CONV, INFEED |
| 20 | 1 | 374159-001 | PLT, SIDE, CONV, INFEED |
| 21 | 1 | 374161 | PLT, SIDE, CONV, INFEED, UPSTREAM |
| 22 | 1 | 374161-001 | PLT, SIDE, CONV, INFEED, UP STRM, SHORT |
| 23 | 3 | 374168-015 | WLDMT, SUPPORT, CONV, 49" ELEV |
| 24 | 6 | 801296-003 | RAIL, GUIDE, TEE, 1.90 W, 12' LG, SS |
| 25 | 48 | 801369 | CLAMP, RAIL, SINGLE, 1.5 LG, SS, ROUND HOLE |
| 26 | 8 | 810473 | BRG, CARR, 1/2 X 1 1/8 X 5/16 LG, SS DOUBLE SEALED |
| 27 | 13 | 828038 | BELT, ACETAL, GRAY, FLAT TOP, 1100 SERIES, 27"W(684mm) |
| 28 | 13 | 828038 | BELT, ACETAL, GRAY, FLAT TOP, 1100 SERIES, 27"W(684mm) |
| 29 | 8 | 828156 | FTG, GREASE, STRAIGHT, SS, 1/4-28 |
| 30 | 4 | 839632 | SRG, FLG, TID, 4-BOLT |
| 31 | 18 | 839679 | SPROCKET, 21, EZ TRACKING GREY ACETAL 1.5"SQ BORE |
| 32 | 6 | 841410 | LEVELER, ARTICULATING, 7400 # CAP, 3/4-10 STEM, 9.5 HIGH, CRS 3" BASE, 2 C'SUNK LAG HOLES, HEAVY LIP ON BASE |
| 33 | 2 | 849485 | GEARMOTOR, 01" HOLLOW SHAFT, 20:1, 83 RPM, 1 HP, 230/460 VAC, W/ TORQUE ARM |
| 34 | 4 | 850128 | EXTRUSION, UHMW, J-LEGS, 10' LG, FOR 11GA SHEET |

| REV | DATE | BY | NOTE |
|---|---|---|---|
| A | 9/20/2021 | SRA | 389518 WAS 372966 |

REVISIONS

NOTES
- INTERPRET PER ASME Y14.5M-1994.
- DIMENSIONS ARE IN INCHES [mm].
- DIMENSIONS IN PARENTHESES FOR REFERENCE ONLY.
- BREAK SHARP EDGES AND CORNERS.
- PROPRIETARY NOTICE: THIS INFORMATION IS THE PROPERTY OF ARPAC LLC AND SHALL NOT BE USED FOR ANY PURPOSE OTHER THAN THAT FOR WHICH IT WAS OBTAINED.
- CREATED IN SOLIDWORKS 2018.

CREATED IN SOLIDWORKS 2018

| | | |
|---|---|---|
| S | FILE \ CONFIG | 374152/374152 |
| S | SIMILAR TO | – |
| S | DATE CREATED | Tuesday, August 7, 2012 4:09:14 PM |
| S | DATE UPDATED | Monday, September 20, 2021 3:24:43 PM |
| S | UPDATED BY | sarcher |
| – | DATE CREATED | Tuesday, April 6, 2021 11:16:34 AM |
| S | DATE UPDATED | Monday, September 20, 2021 3:24:24 PM |
| S | UPDATED BY | sarcher |

ARPAC A DEMATIC COMPANY
8803 W. Irving Park Rd.
Schiller Park, IL 60176
www.arpac.com

| SIZE | SCALE | MATERIAL | DESCRIPTION |
|---|---|---|---|
| D | 1:10 | SEE BILL OF MATERIALS | ASSY, CONVEYOR, INFEED, TS-2200, 47" ELEV |
| 3RD ANGLE | UNITS | | |
| | INCH | | |
| TOLERANCES | | FINISH | NUMBER |
| XX: ±1/32<br>X.XX: ±.015<br>X.XXX: ±.005<br>ANGLES: ±1° | | NONE | 374152 |

"C:\mVenia_Vault\Designs\370000\374000\374152.sldprt" accessed Monday, September 20, 2021.

SHEET 1 OF 1

ARPAC B SIZE FORMAT R5.1

| BILL OF MATERIALS | | | |
|---|---|---|---|
| ITEM | QTY | NUMBER | DESCRIPTION |
| 1 | 2 | 374147 | F-BAR CLAMP |
| 2 | 1 | 374155 | BAR, FLIGHT |
| 3 | 4 | 800290-005 | FSNR, NUT, HEX, 10-32, SS |
| 4 | 4 | 841914 | PLUNGER, BALL, #10-32 X 1/2"L |

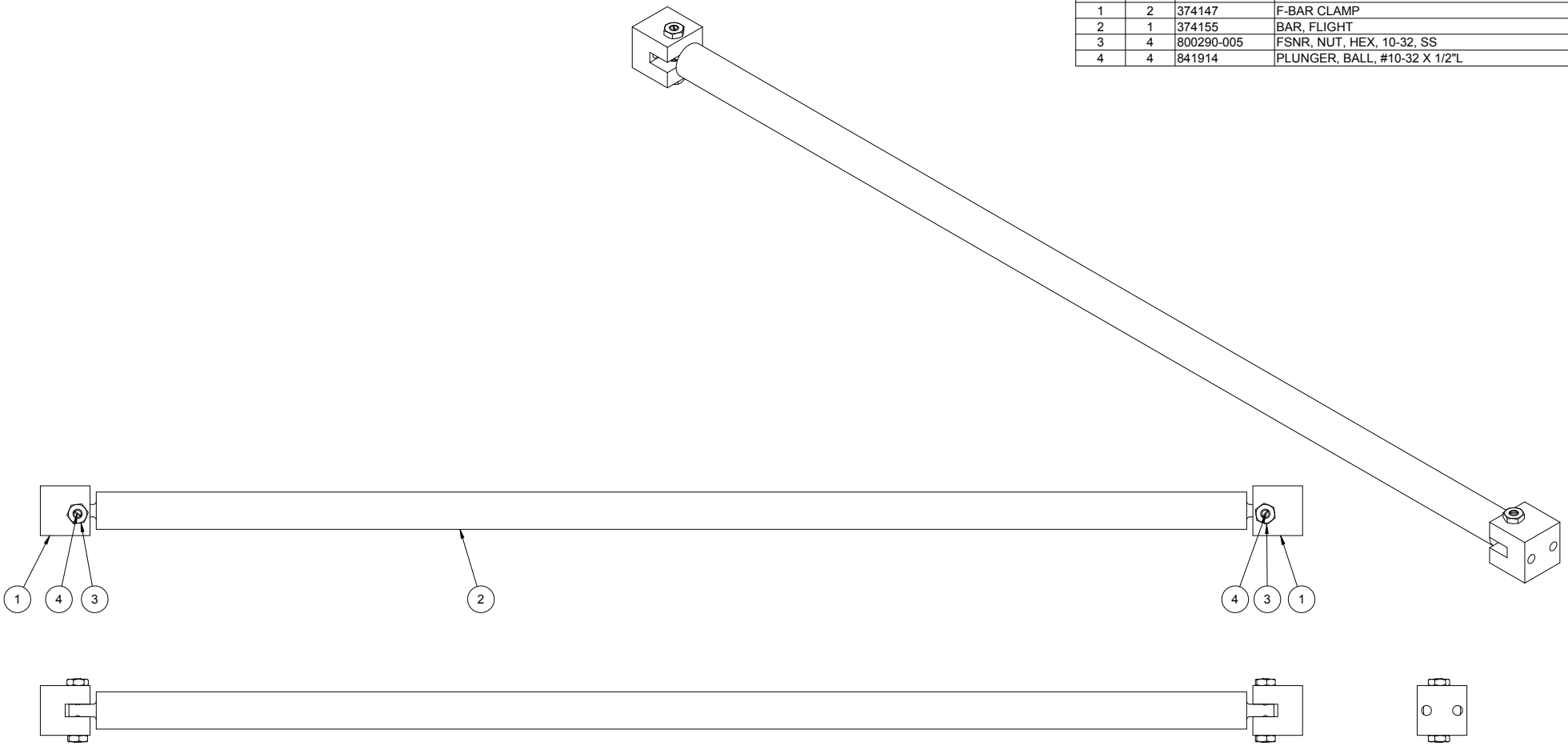


| REV | DATE | BY | NOTE |
|---|---|---|---|
| REVISIONS | | | |

NOTES
- INTERPRET PER ASME Y14.5M-1994.
- DIMENSIONS ARE IN INCHES [mm].
- DIMENSIONS IN PARENTHESES FOR REFERENCE ONLY.
- BREAK SHARP EDGES AND CORNERS.
- PROPRIETARY NOTICE: THIS INFORMATION IS THE PROPERTY OF ARPAC LLC AND SHALL NOT BE USED FOR ANY PURPOSE OTHER THAN THAT FOR WHICH IT WAS OBTAINED.
- CREATED IN SOLIDWORKS 2018.

CREATED IN SOLIDWORKS 2018

ARPAC A DURAVANT COMPANY
9555 W. Irving Park Rd.
Schiller Park, IL 60176
www.arpac.com

| | | |
|---|---|---|
| MODEL | FILE \ CONFIG | 374154\374154 |
| | SIMILAR TO | -- |
| | DATE CREATED | Tuesday, March 30, 2021 9:39:19 AM |
| | DATE UPDATED | Tuesday, April 27, 2021 9:58:51 AM |
| | UPDATED BY | sarcher |
| DRAFT | DATE CREATED | Thursday, April 8, 2021 9:46:28 AM |
| | DATE UPDATED | Tuesday, April 27, 2021 10:03:55 AM |
| | UPDATED BY | sarcher |

| SIZE | SCALE |
|---|---|
| B | 1:2 |
| 3RD ANGLE | UNITS |
| | INCH |

TOLERANCES
X/X: ±1/32
X.XX: ±.015
X.XXX: ±.005
ANGLES: ±1°

MATERIAL
SEE BILL OF MATERIALS

FINISH
NONE

DESCRIPTION
ASSY, BAR, FLIGHT, RELEASE, QUICK

NUMBER
374154

"C:\nVenia_Vault\Designs\370000\374000\374154.slddrw" accessed Tuesday, April 27, 2021.

ARPAC D SIZE FORMAT REV. 1

| BILL OF MATERIALS | | | |
|---|---|---|---|
| ITEM | QTY | NUMBER | DESCRIPTION |
| 1 | 4 | 360125 | TBG, MTG, LEXAN |
| 2 | 4 | 360132 | DOOR, AGITATOR, 16880 |
| 3 | 2 | 374165 | BRKT, DOOR, STOP, LATCH |
| 4 | 4 | 374166 | BRACKET, GUARDING |
| 5 | 4 | 802653 | LATCH, VISE-ACTION |
| 6 | 8 | 810174 | HINGE, DOOR, POLYAMIDE, BLACK |

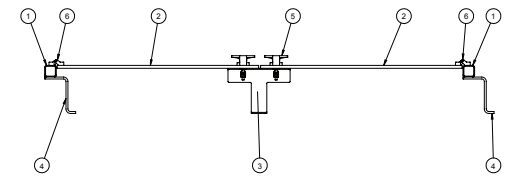


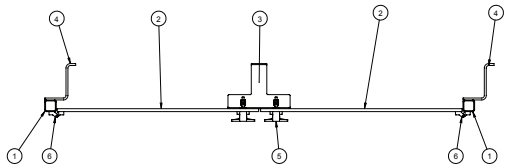


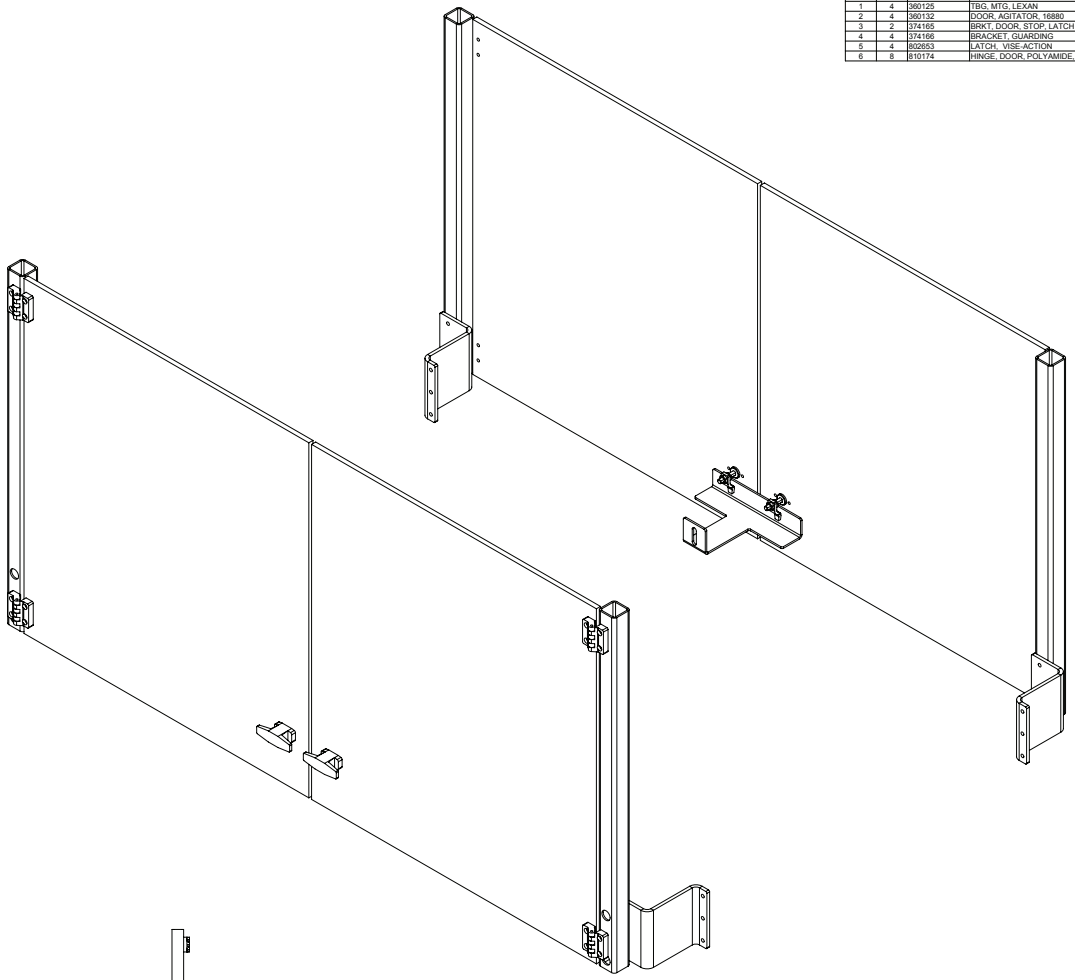

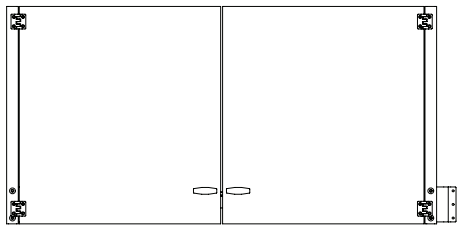

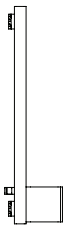

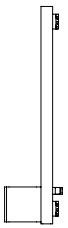

| REV | DATE | BY | NOTE |
|---|---|---|---|
| | | | |

REVISIONS

NOTES
- INTERPRET PER ASME Y14.5M-1994.
- DIMENSIONS ARE IN INCHES [mm].
- DIMENSIONS IN PARENTHESES FOR REFERENCE ONLY.
- BREAK SHARP EDGES AND CORNERS.
- PROPRIETARY NOTICE: THIS INFORMATION IS THE PROPERTY OF ARPAC LLC AND SHALL NOT BE USED FOR ANY PURPOSE OTHER THAN THAT FOR WHICH IT WAS OBTAINED.
- CREATED IN SOLIDWORKS 2018.

CREATED IN SOLIDWORKS 2018

| | | |
|---|---|---|
| 1 | FILE \ CONFIG SIMILAR TO | 374158\374158 372317 |
| 2 | DATE CREATED | Thursday, April 19, 2018 11:49:22 AM |
| 3 | DATE UPDATED | Friday, April 9, 2021 10:00:25 AM |
| | UPDATED BY | jhardy |
| 4 | DATE CREATED | Monday, April 5, 2021 8:38:35 AM |
| 5 | DATE UPDATED | Tuesday, April 27, 2021 9:27:49 AM |
| 5 | UPDATED BY | sarcher |

ARPAC
A DRIVEMIGHT COMPANY
8893 W. Irving Park Rd.
Schiller Park, IL 60176
www.arpac.com

| SIZE | SCALE | MATERIAL | DESCRIPTION |
|---|---|---|---|
| D | 1:4 | SEE BILL OF MATERIALS | ASSY, GUARD, FLIGHT BAR |
| 3RD ANGLE | UNITS | | |
| | INCH | | |
| TOLERANCES: X.XX: ±1/32 X.XXX: ±.015 X.XXX: ±.005 ANGLES: ±1° | | FINISH: NONE | NUMBER: 374158 |

"C:\mVenia_Vault\Designs\370000\374000\374158.sldprt" accessed Tuesday, April 27, 2021.

SHEET 1 OF 1

ARPAC D SIZE FORMAT REV.

| BILL OF MATERIALS | | | |
|---|---|---|---|
| ITEM | QTY | NUMBER | DESCRIPTION |
| 1 | 10 | 372354-001 | BAR, MTG, SIDE, GUIDE, LANE |
| 2 | 10 | 307084 | BLK, MTG, GUIDE |
| 3 | 5 | 374156 | PLT, GUIDE, LANE, ESCAPEMENT |
| 4 | 5 | 372629-002 | PLT, GUIDE, LANE SHORT |
| 5 | 5 | 372629-001 | PLT, GUIDE, LANE |
| 6 | 5 | 121454-035 | SHAFT, HANGER, 30.8044 LG |
| 7 | 5 | 228692 | ASSY, HANDLE, NUT |
| 8 | 5 | 306497 | PLT, STOP, SPACER |

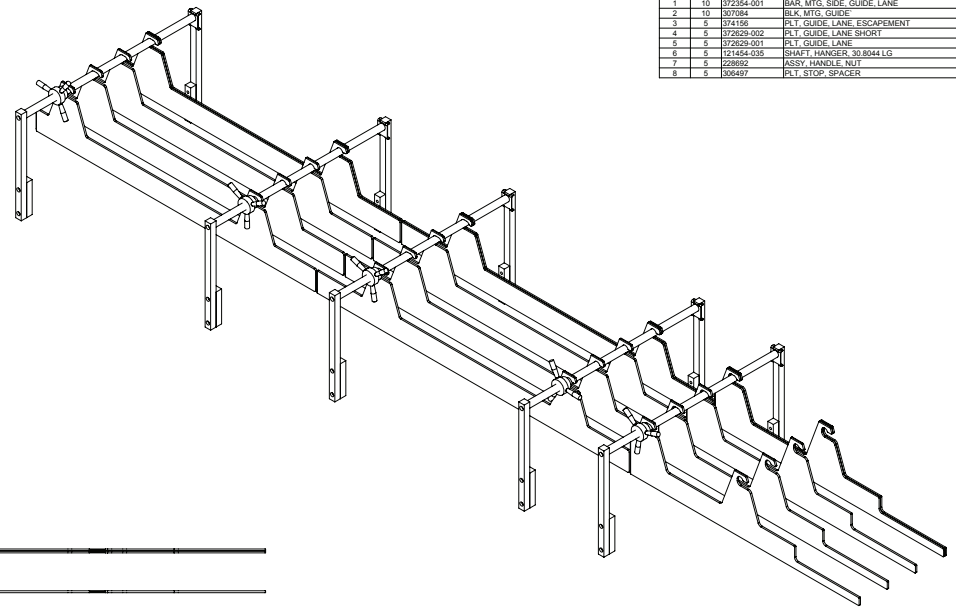

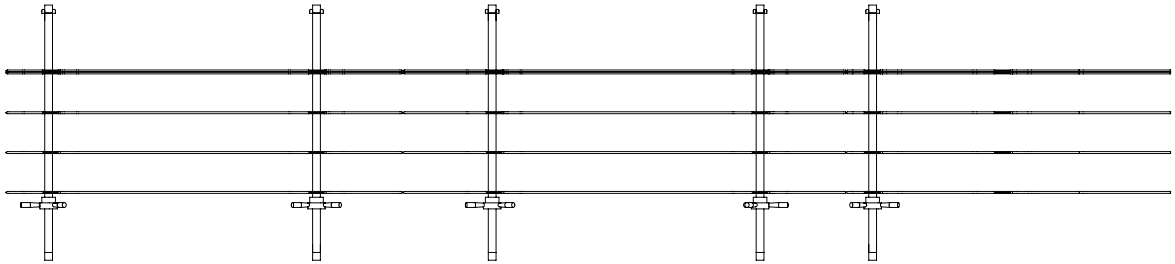

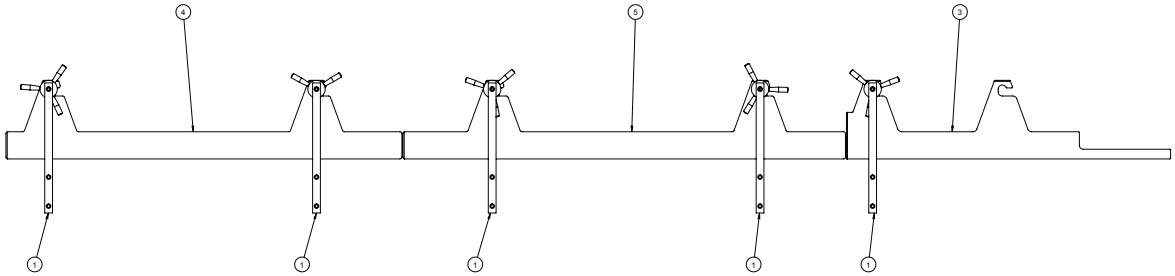


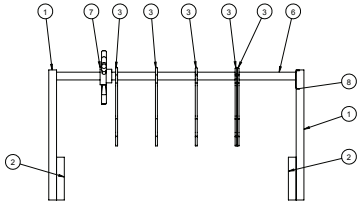


| REV | DATE | BY | NOTE |
|---|---|---|---|
| | | | REVISIONS |

NOTES
- INTERPRET PER ASME Y14.5M-1994.
- DIMENSIONS ARE IN INCHES [mm].
- DIMENSIONS IN PARENTHESES FOR REFERENCE ONLY.
- BREAK SHARP EDGES AND CORNERS.
- PROPRIETARY NOTICE: THIS INFORMATION IS THE PROPERTY OF ARPAC LLC AND SHALL NOT BE USED FOR ANY PURPOSE OTHER THAN THAT FOR WHICH IT WAS OBTAINED.
- CREATED IN SOLIDWORKS 2018.

CREATED IN SOLIDWORKS 2018

| | |
|---|---|
| SIZE | FILE \ CONFIG SIMILAR TO |
| DWG NO | 374160/3X2 355ML 4-PACK CARTONS |
| CREATED | Friday, February 2, 2018 11:10:49 AM |
| LAST PRINTED | Tuesday, April 13, 2021 12:55:51 PM |
| UPDATED BY | jhwang |
| CREATED | Friday, April 9, 2021 11:03:43 AM |
| UPDATED | Tuesday, April 27, 2021 9:50:23 AM |
| UPDATED BY | sarcher |

ARPAC A DRIVEMART COMPANY
8803 W. Irving Park Rd.
Schiller Park, IL 60176
www.arpac.com

| SIZE | SCALE | MATERIAL | DESCRIPTION |
|---|---|---|---|
| D | 1:8 | SEE BILL OF MATERIALS | ASSY, GUIDE, LANE |
| 3RD ANGLE | UNITS | | |
| | INCH | | |
| TOLERANCES: XX: ±1/32 X.XX: ±.015 X.XXX: ±.005 ANGLES: ±1° | | FINISH: NONE | NUMBER: 374160 |

"C:\mVenia_Vault\Designs\370000\374000\374160.sldprt" accessed Tuesday, April 27, 2021.

SHEET 1 OF 1

ARPAC B SIZE FORMAT R5.1

| BILL OF MATERIALS | | | |
|---|---|---|---|
| ITEM | QTY | NUMBER | DESCRIPTION |
| 1 | 1 | 383396 | WLDMT, FRAME, TS-2300, RH, 48" ELEV |
| 2 | 6 | 841409 | LEVELER, ARTICULATING, 20000 # CAP, 1-8 STEM, 9.88 HIGH, CRS 4" BASE, 2 C'SUNK LAG HOLES, HEAVY LIP ON BASE |

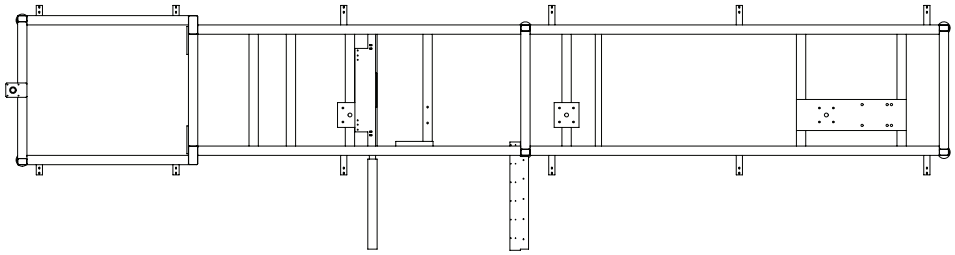

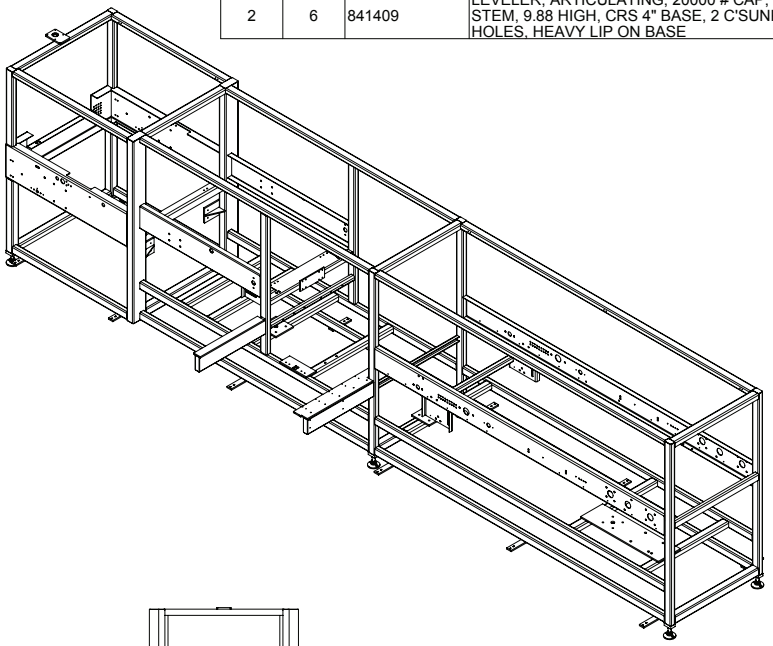

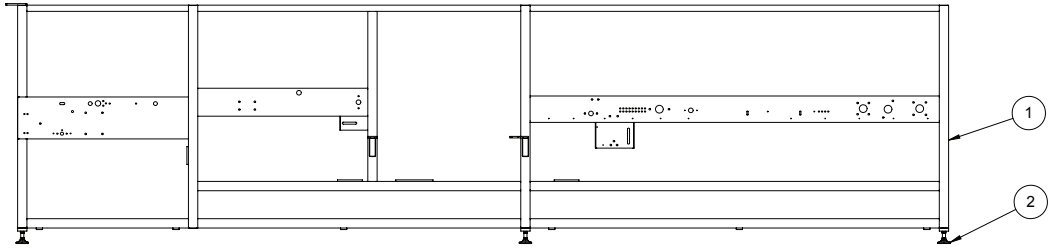


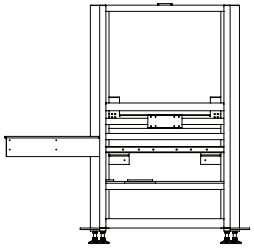

| REV | DATE | BY | NOTE |
|---|---|---|---|
| REVISIONS | | | |

NOTES
- INTERPRET PER ASME Y14.5M-1994.
- DIMENSIONS ARE IN INCHES [mm].
- DIMENSIONS IN PARENTHESES FOR REFERENCE ONLY.
- BREAK SHARP EDGES AND CORNERS.
- PROPRIETARY NOTICE: THIS INFORMATION IS THE PROPERTY OF ARPAC LLC AND SHALL NOT BE USED FOR ANY PURPOSE OTHER THAN THAT FOR WHICH IT WAS OBTAINED.
- CREATED IN SOLIDWORKS 2018.

CREATED IN SOLIDWORKS 2018

ARPAC A DURAVANT COMPANY
9555 W. Irving Park Rd.
Schiller Park, IL 60176
www.arpac.com

| | | |
|---|---|---|
| MODEL | FILE \ CONFIG | 383397\Default |
| | SIMILAR TO | -- |
| | DATE CREATED | Thursday, March 18, 2021 5:20:42 PM |
| | DATE UPDATED | Monday, April 5, 2021 1:58:51 PM |
| | UPDATED BY | jmeintz |
| DRAFT | DATE CREATED | Thursday, March 18, 2021 5:26:23 PM |
| | DATE UPDATED | Thursday, March 18, 2021 5:27:51 PM |
| | UPDATED BY | sarcher |

| SIZE | SCALE | MATERIAL | DESCRIPTION |
|---|---|---|---|
| B | 1:40 | SEE BILL OF MATERIALS | ASSY, FRAME, TS-2300, RH, 48" ELEV |
| 3RD ANGLE | UNITS | | |
| | INCH | | |
| TOLERANCES | | FINISH | NUMBER |
| X/X: ±1/32<br>X.XX: ±.015<br>X.XXX: ±.005<br>ANGLES: ±1° | | NONE | 383397 |

"C:\nVenia_Vault\Designs_CORRUGATED\TS-2300\220562-1-1\383397.slddrw" accessed Friday, April 16, 2021.

SHEET 1 OF 1

ARPAC C SIZE FORMAT R5.1

| BILL OF MATERIALS | | | |
|---|---|---|---|
| ITEM | QTY | NUMBER | DESCRIPTION |
| 1 | 4 | 383404 | CHANNEL, SUPPORT, GANTRY |
| 2 | 4 | 383403 | CHANNEL, HANGER, GANTRY |
| 3 | 1 | 383402 | BKT, MTG, ASSY, GUIDE |
| 4 | 1 | 872441 | GANTRY, 2-AXIS, YXCF-3 SERIES, 45KG PAYLOAD, 700MM X-STROKE, 700MM Y-STROKE |
| 5 | 2 | 851301-003 | SERVO,VPL,6.55/58 NM/LB.IN,115MMBC,4500 RPM |
| 6 | 2 | 872442 | KIT, AXIAL, POSITION 70, FOR A-B VPL-B1153 SERVOMOTOR |
| 7 | 2 | 872443 | GEARBOX, POSITION 80, 3:1 RATIO, FOR A-B VPL-B1153 SERVOMOTOR |

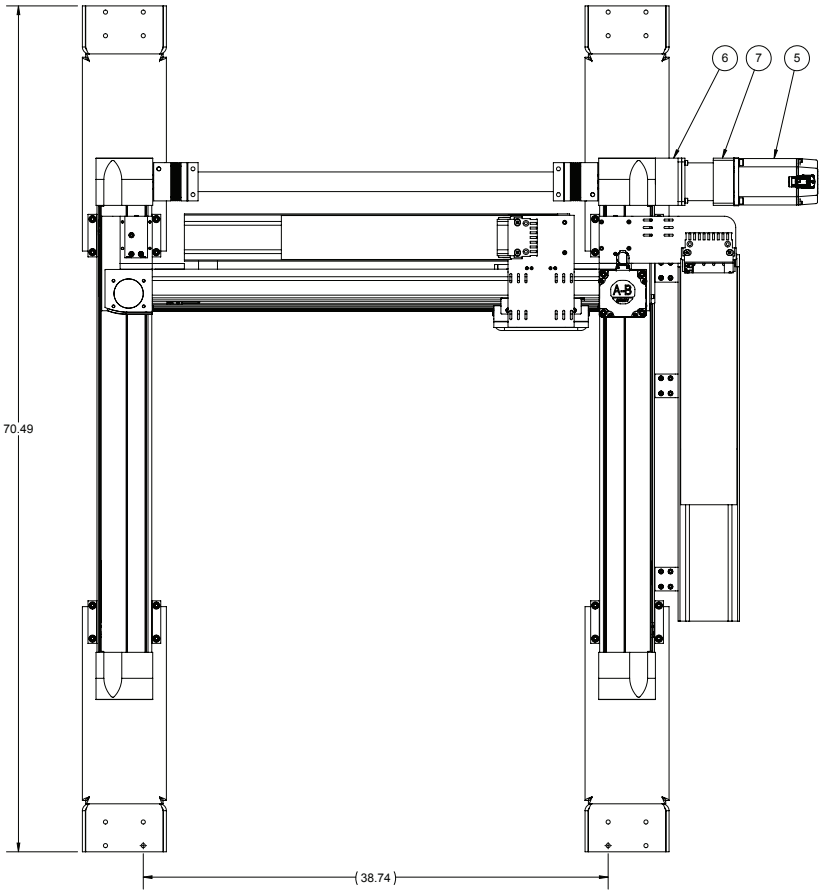


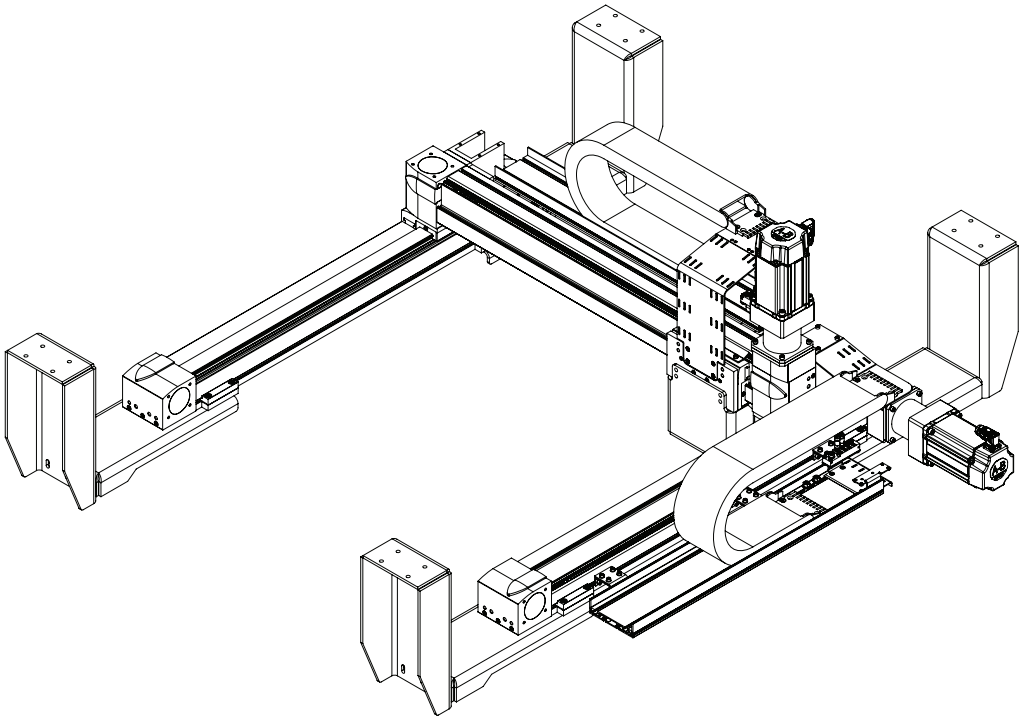

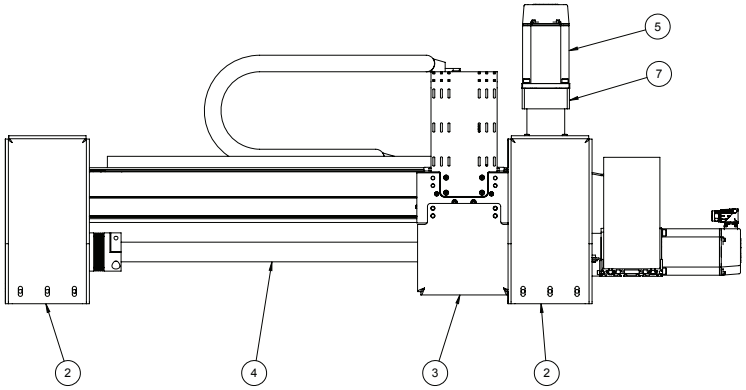


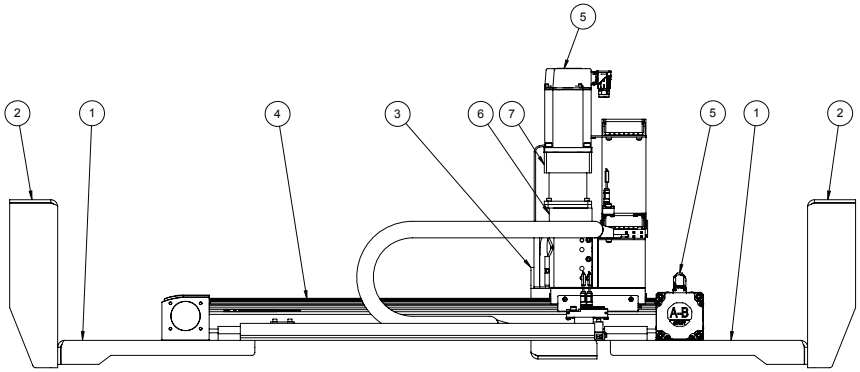


| REV | DATE | BY | NOTE |
|---|---|---|---|
| REVISIONS | | | |

NOTES
- INTERPRET PER ASME Y14.5M-1994.
- DIMENSIONS ARE IN INCHES [mm].
- DIMENSIONS IN PARENTHESES FOR REFERENCE ONLY.
- BREAK SHARP EDGES AND CORNERS.
- PROPRIETARY NOTICE: THIS INFORMATION IS THE PROPERTY OF ARPAC LLC AND SHALL NOT BE USED FOR ANY PURPOSE OTHER THAN THAT FOR WHICH IT WAS OBTAINED.
- CREATED IN SOLIDWORKS 2018.

| | | |
|---|---|---|
| CREATED IN SOLIDWORKS 2018 | ARPAC A DURAVANT COMPANY 9555 W. Irving Park Rd. Schiller Park, IL 60176 www.arpac.com | |
| MODEL | FILE \ CONFIG | 383405\Default |
| | SIMILAR TO | – |
| | DATE CREATED | Monday, March 22, 2021 1:26:46 PM |
| | DATE UPDATED | Wednesday, March 24, 2021 9:36:28 AM |
| | UPDATED BY | sarcher |
| DRAFT | DATE CREATED | Monday, March 22, 2021 1:43:31 PM |
| | DATE UPDATED | Wednesday, March 24, 2021 9:36:21 AM |
| | UPDATED BY | sarcher |

| | | | |
|---|---|---|---|
| SIZE: C | SCALE: 1:8 | MATERIAL: SEE BILL OF MATERIALS | DESCRIPTION: ASSY, GANTRY, TWO-AXIS |
| 3RD ANGLE | UNITS: INCH | | |
| TOLERANCES: X/X: ±1/32, X.XX: ±.015, X.XXX: ±.005, ANGLES: ±1° | | FINISH: NONE | NUMBER: 383405 |

"C:\ARPAC_VAULT\Designs_CORRUGATED\BPTS\181130\383405.slddrw" accessed Wednesday, March 24, 2021.

SHEET 1 OF 1

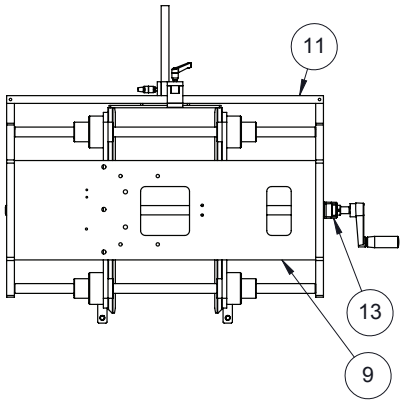


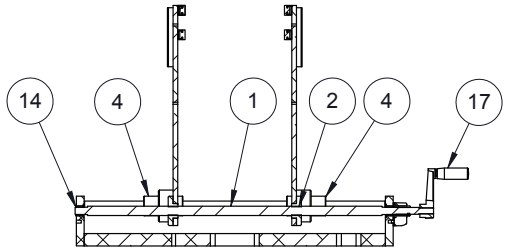


SECTION C-C
SCALE 1 : 10

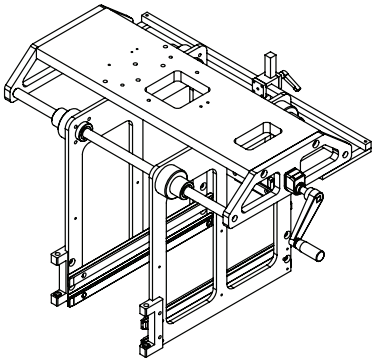

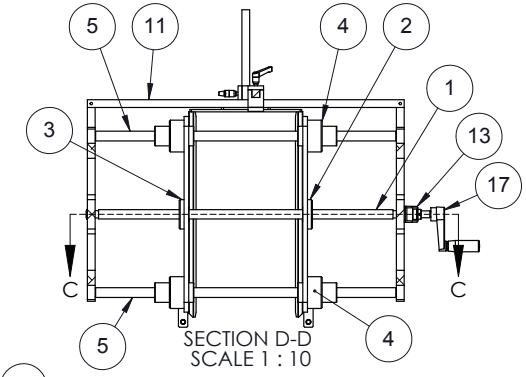


SECTION D-D
SCALE 1 : 10

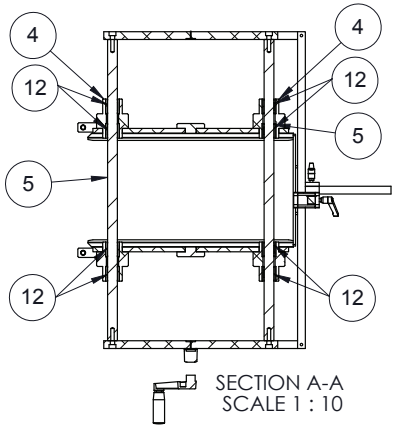


SECTION A-A
SCALE 1 : 10

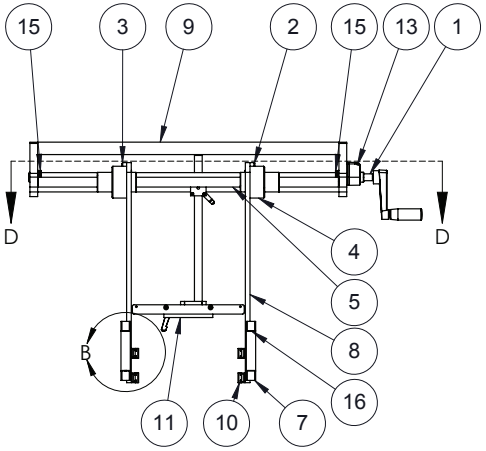


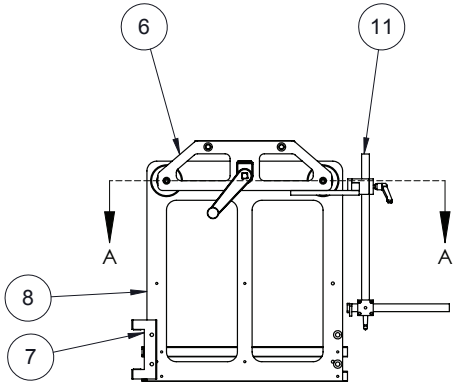


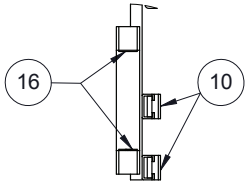


DETAIL B
SCALE 1 : 4

| ITM | QTY | PART NUM | DESCRIPTION |
|---|---|---|---|
| 17 | 1 | 848286 | HANDLE, CRANK, AL, 12 MM SQUARE BORE |
| 16 | 4 | 845590 | BUSH, FLG, 8MM ID X 10MM OD X 9.5MM LG X 15MM FLG OD |
| 15 | 2 | 846868 | BRG, BALL, DEEP GROOVE, AXIAL, ID15MM, OD28MM, W9MM |
| 14 | 2 | 845289 | BUSH, OILITE, 20MM OD X 15MM ID X 15MML |
| 13 | 1 | 827975 | INDICATOR, DIGITAL, DIRECT DRIVE, INCLINED UPPER, P4MM, CW |
| 12 | 8 | 827905 | BRG, BALL, LINEAR, ID20MM, OD28MM, L30MM |
| 11 | 1 | 372277 | ASSY, PRODUCT COUNT, DYN DIV |
| 10 | 5 | 289850 | GUIDE, CHAIN, 14X20MM MODIFIED |
| 9 | 1 | 372276 | PLT, SUPPORT, TOP, GUIDE, LANE |
| 8 | 2 | 284213 | PLT, GUIDE, SIDE, GUIDE, LANE |
| 7 | 2 | 284201 | HINGE |
| 6 | 2 | 284200 | ENDBELL |
| 5 | 2 | 372275 | SHAFT, GUIDE, SUPPORT, GUIDE, LANE |
| 4 | 4 | 284198 | HOUSING, BLK, BRG, GUIDE, LANE |
| 3 | 1 | 293305 | NUT, GUIDE, SCREW, ADJ, GUIDE, LANE |
| 2 | 1 | 293304 | NUT, GUIDE, SCREW, ADJ, GUIDE, LANE |
| 1 | 1 | 372274 | SCREW, ADJ, GUIDE, LANE, 17" OPEN |

BILL OF MATERIALS

ARPAC
9511 WEST RIVER ST.
SCHILLER PARK, IL 60176

UNLESS OTHERWISE SPECIFIED
ALL DIMENSIONAL TOLERANCES:
FRACTIONS ± 1/64
TWO (2) DECIMALS ± 0.010
THREE (3) DECIMALS ± 0.005
ANGLES ± 0.5°

DRAWN: 3/22/2021 | BY: SRA | SCALE: 1:12 | SIZE: B
RELEASED: | FILENAME: 383407 | APPROVED BY:

DESCRIPTION:
ASSY, GUIDE, LANE, EXIT, DIVIDER, DYNAMIC

DRAWING NUMBER:
383407

ARPAC C SIZE FORMAT R5.1

BILL OF MATERIALS

| ITEM | QTY | NUMBER | DESCRIPTION |
|---|---|---|---|
| 1 | 1 | 383426 | ASSY, FRAME, DIVIDER, DYNAMIC, 48" ELEV |
| 2 | 1 | 372271 | ASSY, GUIDE, LANE, ENTRY, DIVIDER, DYNAMIC, MAX 10" W |
| 3 | 1 | 345164 | ASSY, GUIDE, SLIDE, GUIDE, LANE |
| 4 | 1 | 383407 | ASSY, GUIDE, LANE, EXIT, DIVIDER, DYNAMIC |
| 5 | 1 | 345164-001 | ASSY, GUIDE, SLIDE, GUIDE, LANE, LH |
| 6 | 1 | 383433 | ASSY, GUARDS, DIVIDER, DYNAMIC, 48" ELEV |
| 7 | 1 | 383405 | ASSY, GANTRY, TWO-AXIS |
| 8 | 1 | 372287 | ASSY, CONV, LONG, DIVIDER, DYNAMIC |
| 9 | 1 | 384621 | ASSY, CONV, SHORT, DIVIDER, DYNAMIC |
| 10 | 1 | 384764 | ASSY, CONV, INFEED, DIVIDER, LANE |
| 11 | 1 | 383430 | ASSY, GUIDE, LANE, DISCHARGE, DIVIDER |
| 12 | 1 | 372611-001 | WLDMT, BKT, MTG, ENCLOSURE |
| 13 | 1 | 372777 | BKT, MTG, BOX, 6-BUTTON |
| 14 | 1 | 330101 | BKT, MTG, BOX, BUTTON, SINGLE |
| 15 | 1 | 828038 | BELT, ACETAL, GRAY, FLAT TOP, 1100 SERIES, 27"W(684mm) |

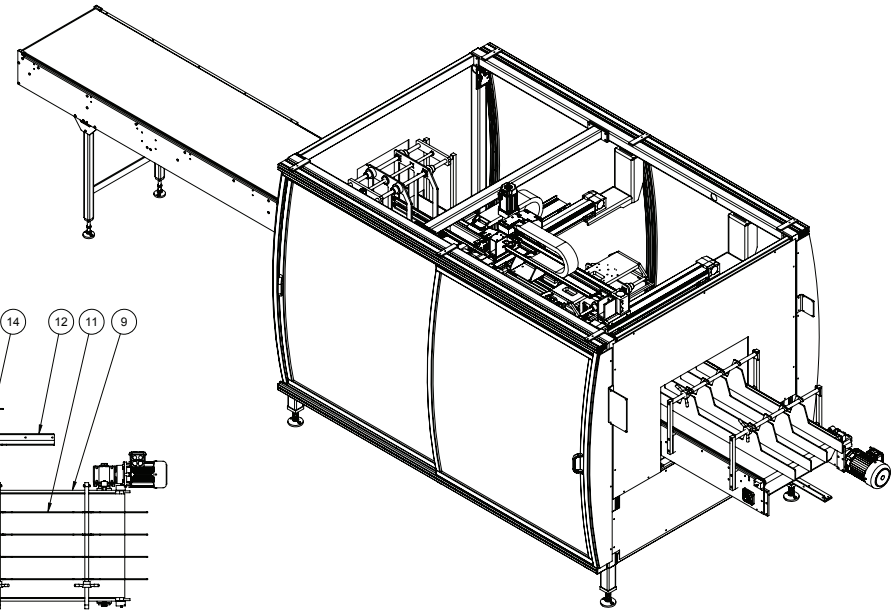

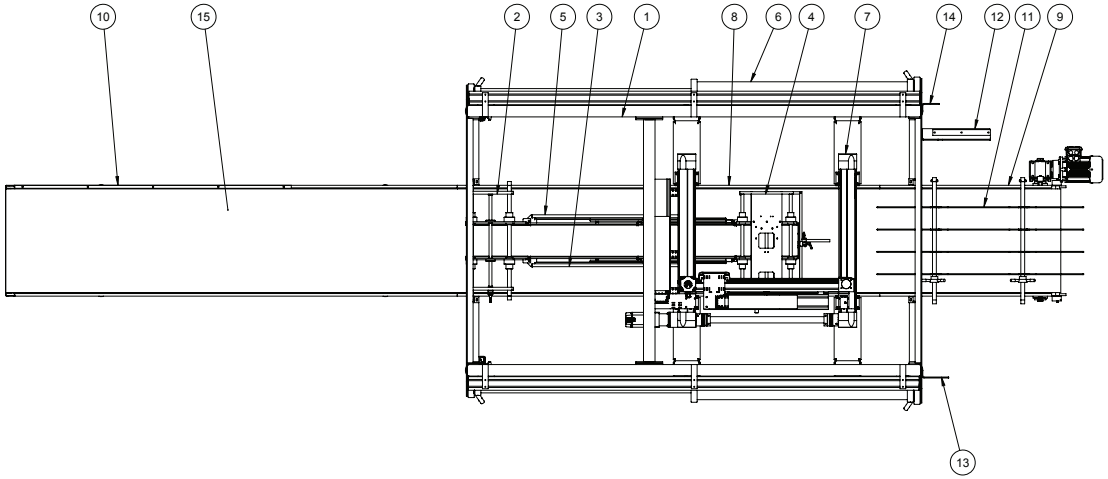


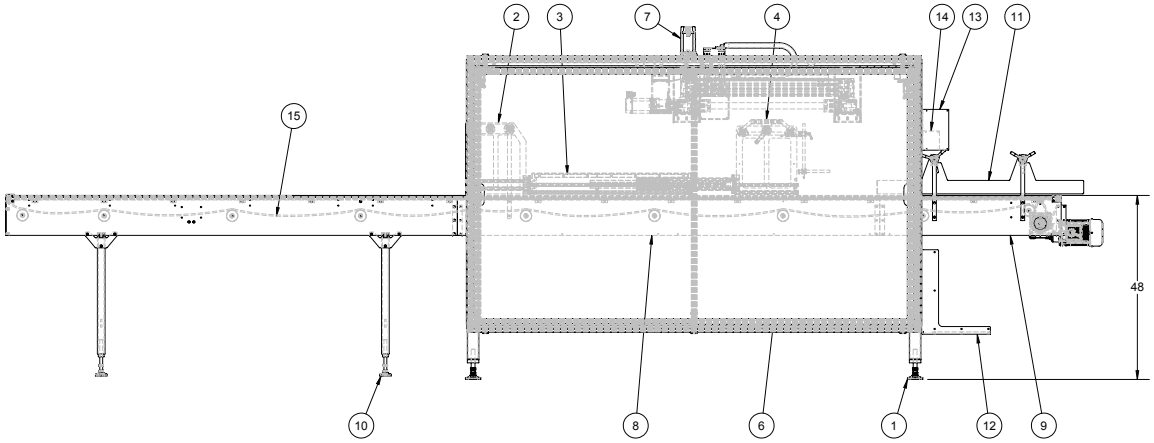


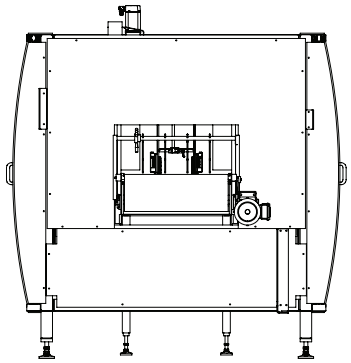

| REV | DATE | BY | NOTE |
|---|---|---|---|
| | | | |

REVISIONS

NOTES
- INTERPRET PER ASME Y14.5M-1994.
- DIMENSIONS ARE IN INCHES [mm].
- DIMENSIONS IN PARENTHESES FOR REFERENCE ONLY.
- BREAK SHARP EDGES AND CORNERS.
- PROPRIETARY NOTICE: THIS INFORMATION IS THE PROPERTY OF ARPAC LLC AND SHALL NOT BE USED FOR ANY PURPOSE OTHER THAN THAT FOR WHICH IT WAS OBTAINED.
- CREATED IN SOLIDWORKS 2018.

CREATED IN SOLIDWORKS 2018

ARPAC A DURAVANT COMPANY
9555 W. Irving Park Rd.
Schiller Park, IL 60176
www.arpac.com

| | | |
|---|---|---|
| MODEL | FILE \ CONFIG | 383409\383409 |
| | SIMILAR TO | -- |
| | DATE CREATED | Tuesday, July 24, 2012 11:04:22 AM |
| | DATE UPDATED | Tuesday, April 20, 2021 3:57:47 PM |
| | UPDATED BY | Gibran.Mota |
| DRAFT | DATE CREATED | Friday, April 16, 2021 10:25:04 AM |
| | DATE UPDATED | Tuesday, April 20, 2021 3:57:14 PM |
| | UPDATED BY | Gibran.Mota |

| SIZE | SCALE |
|---|---|
| C | 1:25 |

| 3RD ANGLE | UNITS |
|---|---|
| | INCH |

TOLERANCES
X/X: ±1/32
X.XX: ±.015
X.XXX: ±.005
ANGLES: ±1°

MATERIAL: SEE BILL OF MATERIALS

FINISH: NONE

DESCRIPTION: ASSY, DIVIDER, DYNAMIC, LD-400, 48" ELEV

NUMBER: 383409

"C:\nVenia_Vault\Designs_CORRUGATED\TS-2300\220562-1-1\383409.slddrw" accessed Tuesday, April 20, 2021.

SHEET 1 OF 1

ARPAC-D SIZE (-FORMAT 1B)

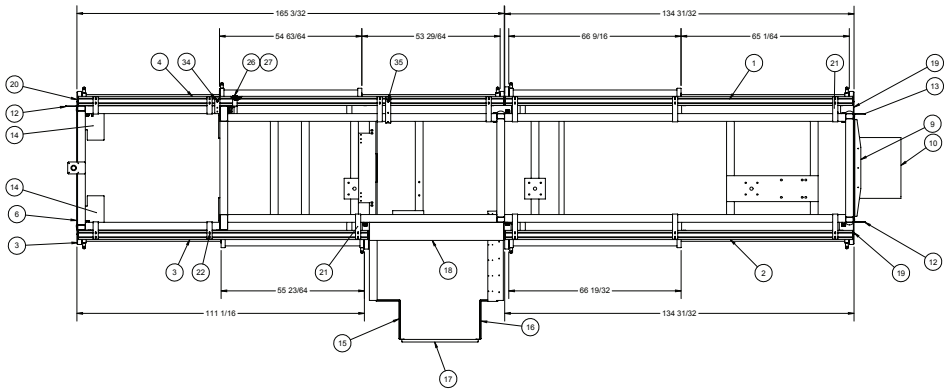


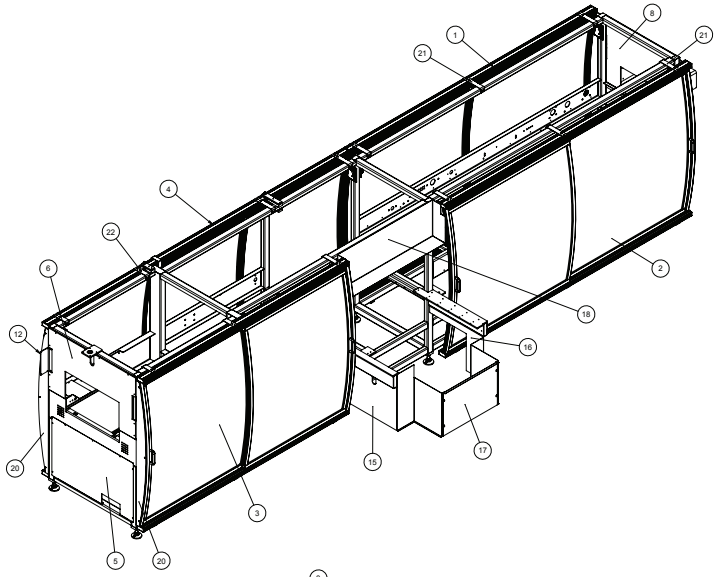

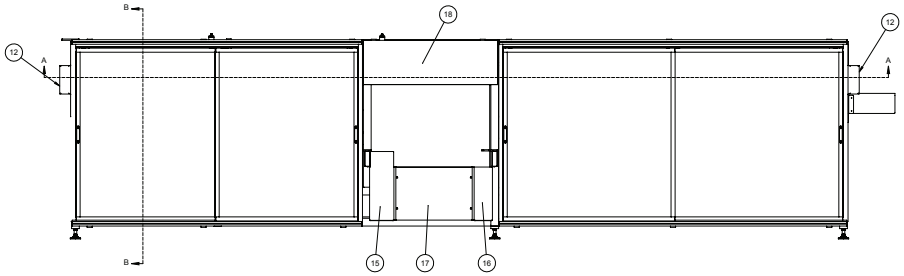

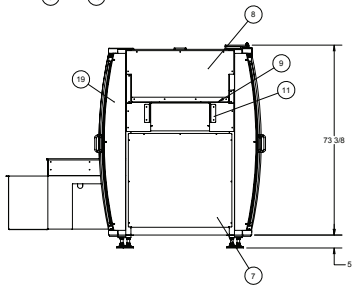


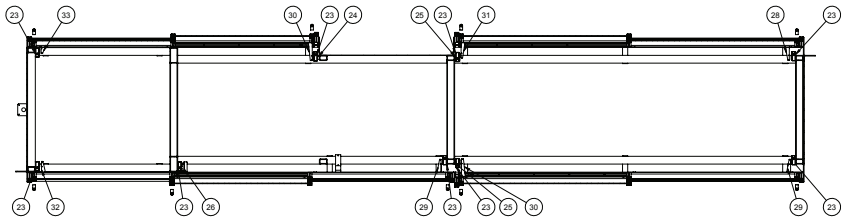

SECTION A-A

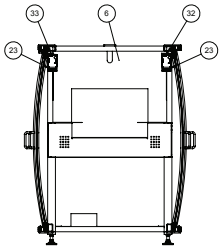

SECTION B-B

BILL OF MATERIALS

| ITEM | QTY | NUMBER | DESCRIPTION |
|---|---|---|---|
| 1 | 1 | 846048 | KIT, AL EXTRUSION, GUARD, 72 H X 134.72 LG |
| 2 | 1 | 846048-001 | KIT, AL EXTRUSION, GUARD, 72 H X 134.72 LG |
| 3 | 1 | 846052 | KIT, AL EXTRUSION, GUARD, 72 H X 112.4 LG |
| 4 | 1 | 846053 | KIT, AL EXTRUSION, GUARD, 72 H X 164.85 LG |
| 5 | 1 | 383419 | PANEL, GUARD, LOWER, INFEED |
| 6 | 1 | 383418 | PANEL, GUARD, ENTRANCE, LEXAN |
| 7 | 1 | 383424 | PANEL, GUARD, LOWER, DISCHARGE |
| 8 | 1 | 383420 | PANEL, GUARD, END, LEXAN |
| 9 | 1 | 384762 | BKT, MTG, GUARD, DISCHARGE |
| 10 | 1 | 384915 | GUARD, ACCESS, REACH, DISCHARGE |
| 11 | 2 | 369916 | BKT, MTG, GUARD |
| 12 | 2 | 329576 | BKT, MTG, BOX, 4-BUTTON |
| 13 | 1 | 330101 | BKT, MTG, BOX, BUTTON, SINGLE |
| 14 | 2 | 371176 | PANEL, GUARD, COLLATOR |
| 15 | 1 | 372604 | GUARD, MAGAZINE, LOWER |
| 16 | 1 | 372603-001 | GUARD, MAGAZINE, LOWER |
| 17 | 1 | 372435 | PANEL, GUARD, LOWER, MAGAZINE |
| 18 | 1 | 383425 | GUARD, UPPER, MAGAZINE |
| 19 | 2 | 292137-003 | GUARD, END, DOORS |
| 20 | 2 | 292137 | GUARD, END, DOORS |
| 21 | 9 | 292478-001 | BKT, MTG, ASSY, DOOR, TOP |
| 22 | 4 | 292478 | BKT, MTG, ASSY, DOOR, TOP |
| 23 | 9 | 369962 | PLT, MTG, SWITCH, DOOR |
| 24 | 1 | 371162 | PLT, SPACER, MTG, SWITCH, .38 THK |
| 25 | 2 | 371160 | PLT, SPACER, MTG, SWITCH, .38 THK |
| 26 | 1 | 298361-001 | BKT, MTG, ACTUATOR, SWITCH, RH |
| 27 | 1 | 298405 | SPACER, BKT |
| 28 | 1 | 291847-001 | BKT, MTG, PIN, SWITCH, DOOR, 5-1/16IN |
| 29 | 2 | 291847 | BKT, MTG, PIN, SWITCH, DOOR, 5-1/16IN |
| 30 | 2 | 295915-001 | BKT, MTG, PIN, SWITCH, DOOR, 6" LONG |
| 31 | 1 | 292475 | BKT, MTG, PIN, SWITCH, DOOR, 6" LONG |
| 32 | 1 | 291845-001 | BKT, MTG, PIN, SWITCH, DOOR, 4.25IN |
| 33 | 1 | 291848 | BKT, MTG, PIN, SWITCH, DOOR, 2.5IN |
| 34 | 1 | 371515 | ASSY, SUPPORT, ADJ, FRAME, DOOR |
| 35 | 1 | 371514 | ASSY, SUPPORT, ADJ, FRAME, DOOR |

| REV | DATE | BY | NOTE |
|---|---|---|---|
| REVISIONS | | | |

NOTES
- INTERPRET PER ASME Y14.5M-1994.
- DIMENSIONS ARE IN INCHES [mm].
- DIMENSIONS IN PARENTHESES FOR REFERENCE ONLY.
- BREAK SHARP EDGES AND CORNERS.
- PROPRIETARY NOTICE: THIS INFORMATION IS THE PROPERTY OF ARPAC LLC AND SHALL NOT BE USED FOR ANY PURPOSE OTHER THAN THAT FOR WHICH IT WAS OBTAINED.
- CREATED IN SOLIDWORKS 2018.

CREATED IN SOLIDWORKS 2018

| | | |
|---|---|---|
| 2 | FILE \ CONFIG | 383421\383421 |
| 2 | SIMILAR TO | – |
| 2 | DATE CREATED | Thursday, April 1, 2021 9:41:22 AM |
| 3 | DATE UPDATED | Tuesday, June 29, 2021 9:07:33 AM |
| 3 | UPDATED BY | sarcher |
| – | DATE CREATED | Wednesday, April 7, 2021 3:15:06 PM |
| 5 | DATE UPDATED | Tuesday, June 29, 2021 9:07:33 AM |
| 5 | UPDATED BY | sarcher |

ARPAC A DEKRAFT COMPANY
8893 W. Irving Park Rd.
Schiller Park, IL 60176
www.arpac.com

| SIZE | SCALE | MATERIAL | DESCRIPTION |
|---|---|---|---|
| D | 1:24 | SEE BILL OF MATERIALS | ASSY, GUARDS, TS-2300, 48" ELEV, RH |
| 3RD ANGLE | UNITS | | |
| | INCH | | |
| TOLERANCES: XX: ±1/32 X.XX: ±.015 X.XXX: ±.005 ANGLES: ±1° | FINISH: NONE | | NUMBER: 383421 |

SHEET 1 OF 1

"C:\mVenia_Vault\Designs_CORRUGATED\TS-2300\220562-1-1\383421.sldbrw" accessed Tuesday, June 29, 2021.

ARPAC B SIZE FORMAT R5

| BILL OF MATERIALS | | | |
|---|---|---|---|
| ITEM | QTY | NUMBER | DESCRIPTION |
| 1 | 1 | 383427 | ASSY, FRAME, DIVIDER, 48" ELEV |
| 2 | 4 | 284186 | WLDMT, MBR, FRAME, HOR, UPR |
| 3 | 2 | 372327 | GUARD, END, LWR |
| 4 | 4 | 827619 | LEVELER, ARTICULATING, 20000 # CAP, 1-8 STEM, 7.88 HIGH, CRS 4" BASE, 2 C'SUNK LAG HOLES, HEAVY LIP ON BASE |

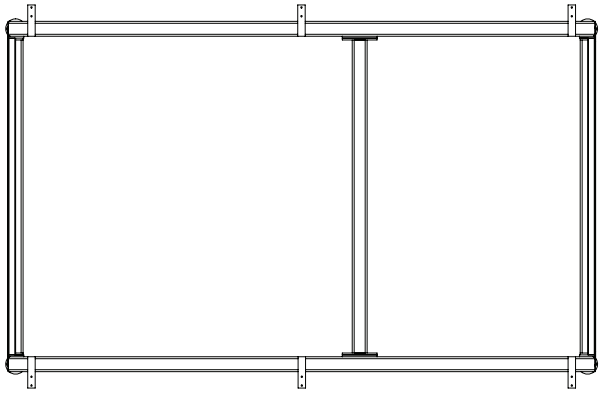

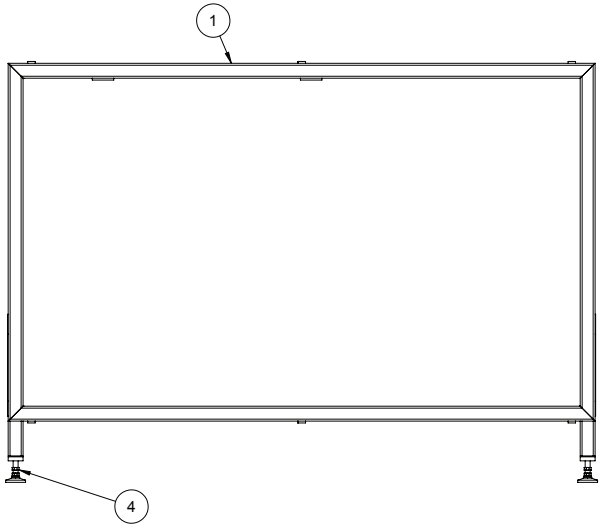


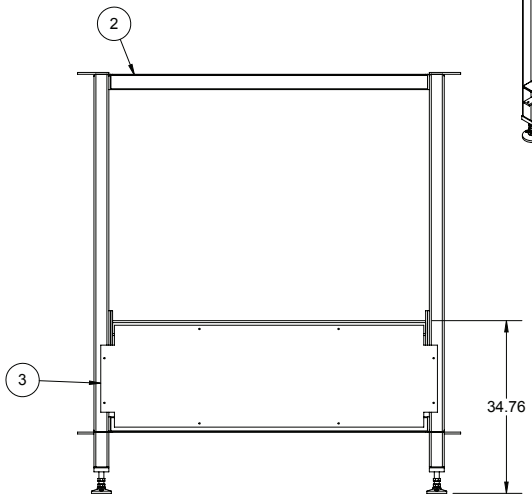


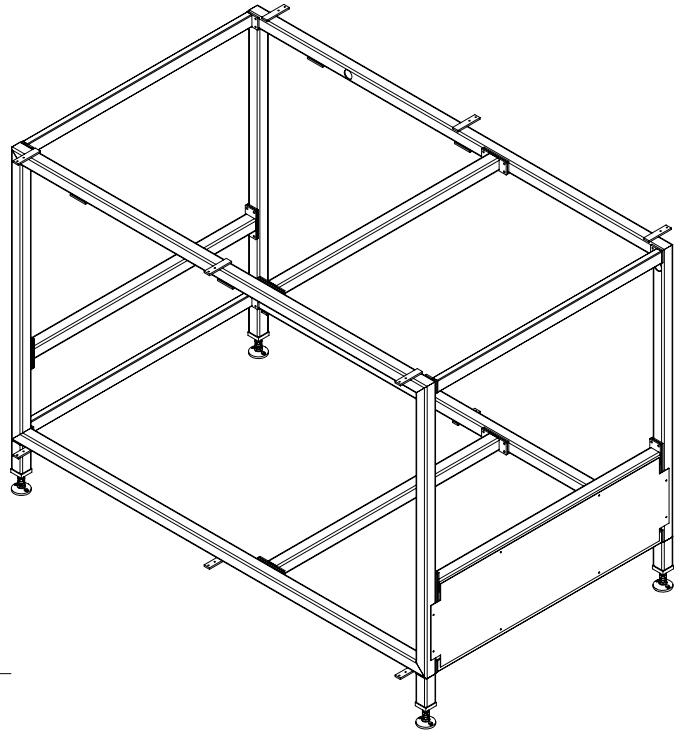

| REV | DATE | BY | NOTE |
|---|---|---|---|
| REVISIONS | | | |

NOTES
- INTERPRET PER ASME Y14.5M-1994.
- DIMENSIONS ARE IN INCHES [mm].
- DIMENSIONS IN PARENTHESES FOR REFERENCE ONLY.
- BREAK SHARP EDGES AND CORNERS.
- PROPRIETARY NOTICE: THIS INFORMATION IS THE PROPERTY OF ARPAC LLC AND SHALL NOT BE USED FOR ANY PURPOSE OTHER THAN THAT FOR WHICH IT WAS OBTAINED.
- CREATED IN SOLIDWORKS 2013.

CREATED IN SOLIDWORKS 2013

ARPAC A DURAVANT COMPANY
9555 W. Irving Park Rd.
Schiller Park, IL 60176
www.arpac.com

| | | |
|---|---|---|
| MODEL | FILE \ CONFIG | 383426\383426 |
| | SIMILAR TO | -- |
| | DATE CREATED | Friday, August 3, 2012 2:14:27 PM |
| | DATE UPDATED | Thursday, April 8, 2021 4:07:55 PM |
| | UPDATED BY | Gibran.Mota |
| DRAFT | DATE CREATED | Wednesday, January 24, 2018 6:03:09 PM |
| | DATE UPDATED | Thursday, April 8, 2021 4:07:55 PM |
| | UPDATED BY | Gibran.Mota |

SIZE: B
SCALE: 1:25
3RD ANGLE
UNITS: INCH
TOLERANCES
X/X: ±1/32
X.XX: ±.015
X.XXX: ±.005
ANGLES: ±1°

MATERIAL: SEE BILL OF MATERIALS
FINISH: NONE

DESCRIPTION: ASSY, FRAME, DIVIDER, DYNAMIC, 48" ELEV
NUMBER: 383426

"C:\nVenia_Vault\Designs_CORRUGATED\TS-2300\220562-1-1\383426.slddrw" accessed Thursday, April 8, 2021.

ARPAC B SIZE FORMAT R5

| BILL OF MATERIALS | | | |
|---|---|---|---|
| ITEM | QTY | NUMBER | DESCRIPTION |
| 1 | 4 | 284169 | ASSY, WLDMT, UNION, RAIL |
| 2 | 1 | 383428 | WLDMT, FRAME, SIDE, DIVIDER |
| 3 | 1 | 383429 | WLDMT, FRAME, SIDE, DIVIDER |

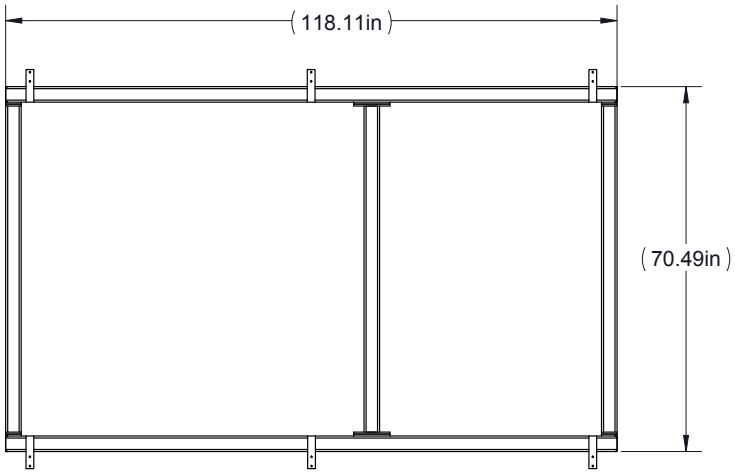


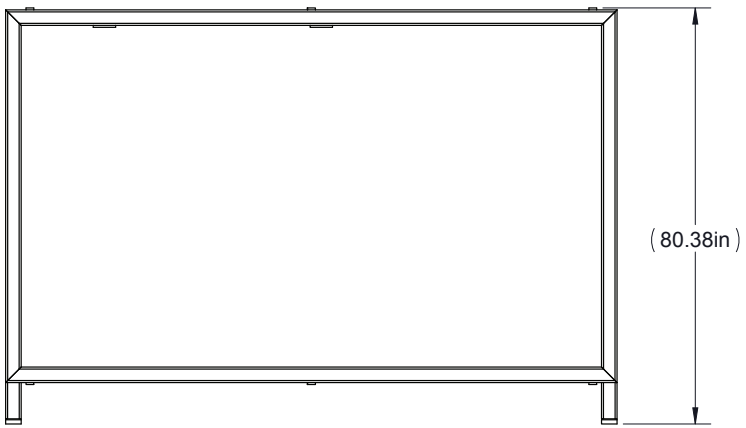


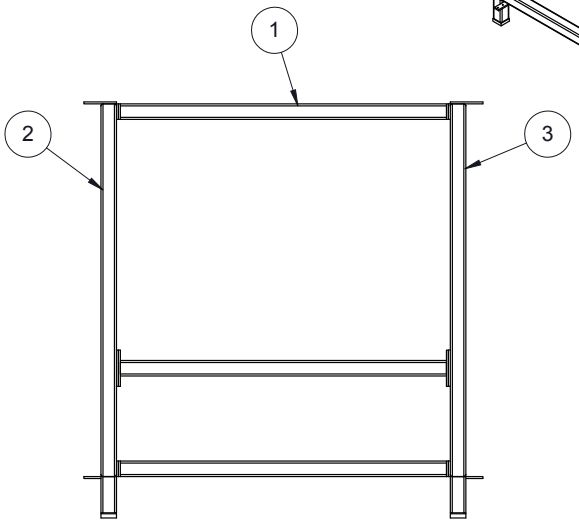


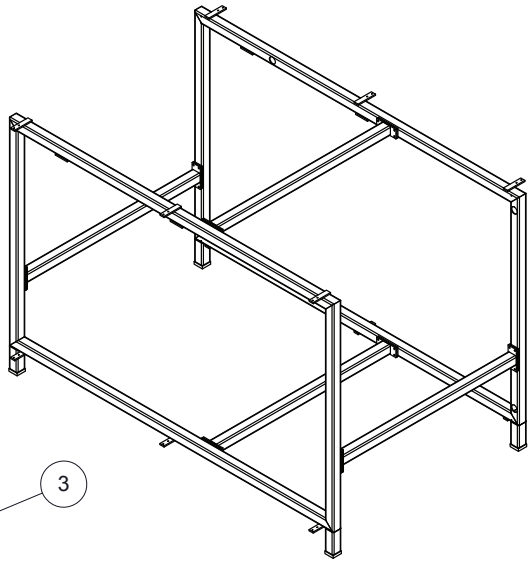

NOTES
- INTERPRET PER ASME Y14.5M-1994.
- DIMENSIONS ARE IN INCHES [mm].
- DIMENSIONS IN PARENTHESES FOR REFERENCE ONLY.
- BREAK SHARP EDGES AND CORNERS.
- PROPRIETARY NOTICE: THIS INFORMATION IS THE PROPERTY OF ARPAC LLC AND SHALL NOT BE USED FOR ANY PURPOSE OTHER THAN THAT FOR WHICH IT WAS OBTAINED.
- CREATED IN SOLIDWORKS 2013.

CREATED IN SOLIDWORKS 2013

ARPAC A DURAVANT COMPANY
9555 W. Irving Park Rd.
Schiller Park, IL 60176
www.arpac.com

| | | |
|---|---|---|
| MODEL | FILE \ CONFIG | 383427\383427 |
| | SIMILAR TO | -- |
| | DATE CREATED | Wednesday, June 27, 2012 4:27:06 AM |
| | DATE UPDATED | Thursday, April 8, 2021 4:08:28 PM |
| | UPDATED BY | Gibran.Mota |
| DRAFT | DATE CREATED | Thursday, June 28, 2012 10:45:55 PM |
| | DATE UPDATED | Thursday, April 8, 2021 4:08:39 PM |
| | UPDATED BY | Gibran.Mota |

| SIZE | SCALE |
|---|---|
| B | 1:32 |
| 3RD ANGLE | UNITS |
| | INCH |

TOLERANCES
X/X: ±1/32
X.XX: ±.015
X.XXX: ±.005
ANGLES: ±1°

MATERIAL: SEE BILL OF MATERIALS

FINISH: NONE

DESCRIPTION: ASSY, FRAME, DIVIDER, 48" ELEV

NUMBER: 383427

"C:\nVenia_Vault\Designs_CORRUGATED\TS-2300\220562-1-1\383427.slddrw" accessed Thursday, April 8, 2021.

ARPAC B SIZE FORMAT R5.1

| BILL OF MATERIALS | | | |
|---|---|---|---|
| ITEM | QTY | NUMBER | DESCRIPTION |
| 1 | 4 | 372354-001 | BAR, MTG, SIDE, GUIDE, LANE |
| 2 | 2 | 306497 | PLT, STOP, SPACER |
| 3 | 2 | 121454-035 | SHAFT, HANGER, 30.8044 LG |
| 4 | 2 | 228692 | ASSY, HANDLE, NUT |
| 5 | 4 | 307084 | BLK, MTG, GUIDES |
| 6 | 4 | 383431 | PLT, GUIDE, LANE, DISCHARGE, DIVIDER |

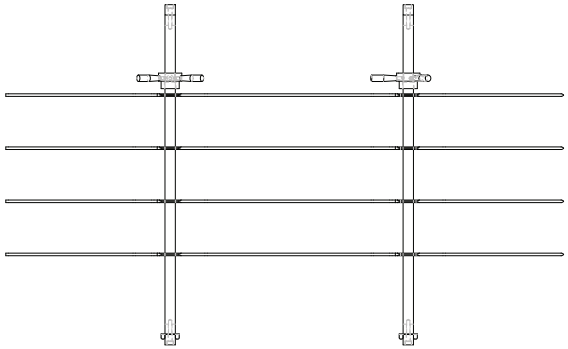

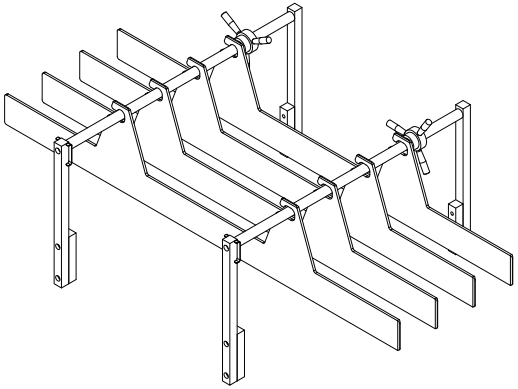

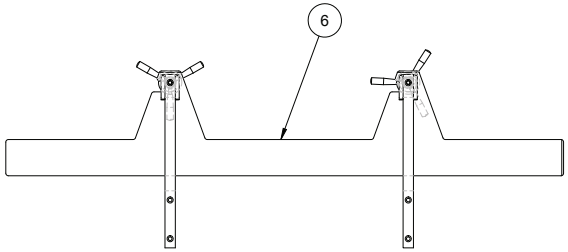


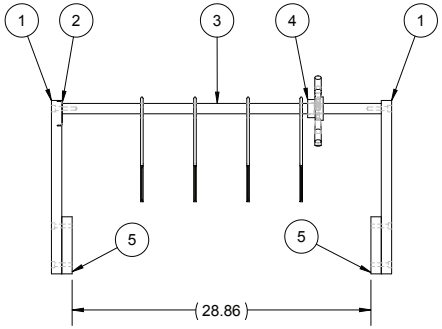


| REV | DATE | BY | NOTE |
|---|---|---|---|
| REVISIONS | | | |

NOTES
- INTERPRET PER ASME Y14.5M-1994.
- DIMENSIONS ARE IN INCHES [mm].
- DIMENSIONS IN PARENTHESES FOR REFERENCE ONLY.
- BREAK SHARP EDGES AND CORNERS.
- PROPRIETARY NOTICE: THIS INFORMATION IS THE PROPERTY OF ARPAC LLC AND SHALL NOT BE USED FOR ANY PURPOSE OTHER THAN THAT FOR WHICH IT WAS OBTAINED.
- CREATED IN SOLIDWORKS 2018.

CREATED IN SOLIDWORKS 2018

ARPAC A DURAVANT COMPANY
9555 W. Irving Park Rd.
Schiller Park, IL 60176
www.arpac.com

| | | |
|---|---|---|
| MODEL | FILE \ CONFIG | 383430\3X2 355ML 4-PACK CARTONS |
| | SIMILAR TO | --- |
| | DATE CREATED | Thursday, April 8, 2021 3:31:58 PM |
| | DATE UPDATED | Friday, April 9, 2021 12:58:02 PM |
| | UPDATED BY | Gibran.Mota |
| DRAFT | DATE CREATED | Friday, April 9, 2021 12:48:32 PM |
| | DATE UPDATED | Friday, April 9, 2021 12:56:45 PM |
| | UPDATED BY | Gibran.Mota |

| SIZE | SCALE |
|---|---|
| B | 1:12 |
| 3RD ANGLE | UNITS |
| | INCH |

TOLERANCES
X/X: ±1/32
X.XX: ±.015
X.XXX: ±.005
ANGLES: ±1°

MATERIAL: SEE BILL OF MATERIALS

FINISH: NONE

DESCRIPTION: ASSY, GUIDE, LANE, DISCHARGE, DIVIDER

NUMBER: 383430

"C:\nVenia_Vault\Designs\380000\383000\383430.slddrw" accessed Friday, April 9, 2021.

ARPAC B SIZE FORMAT R5

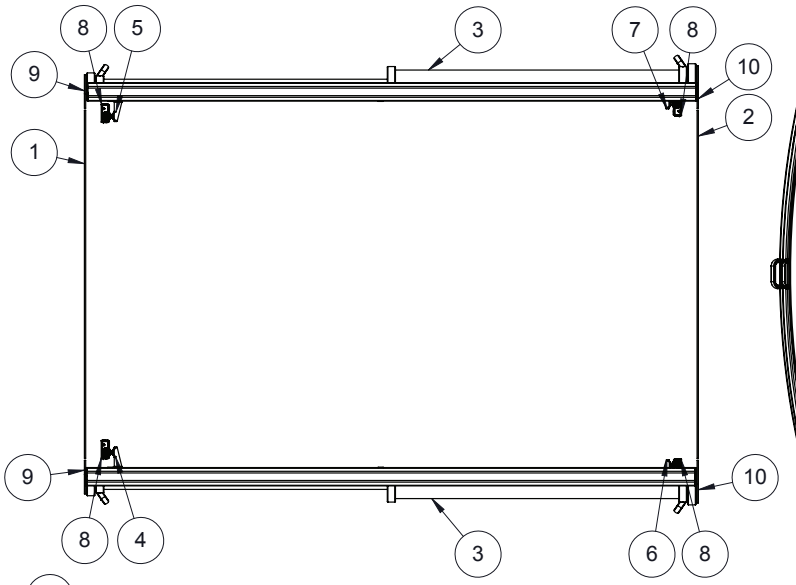


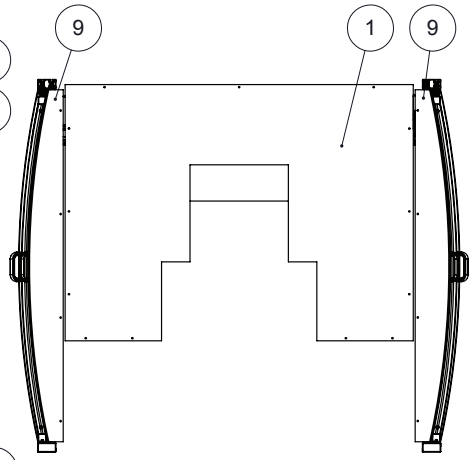


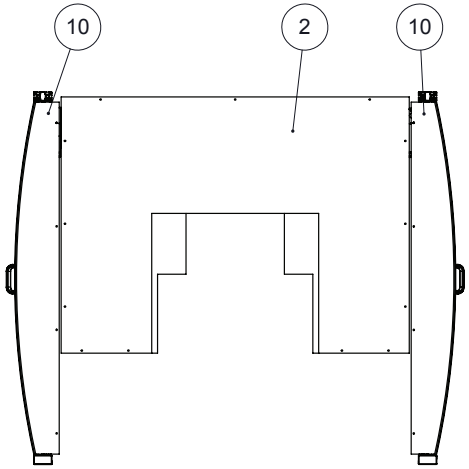


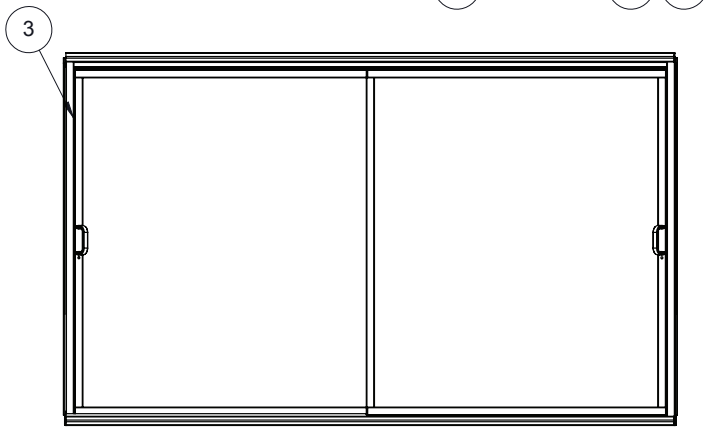


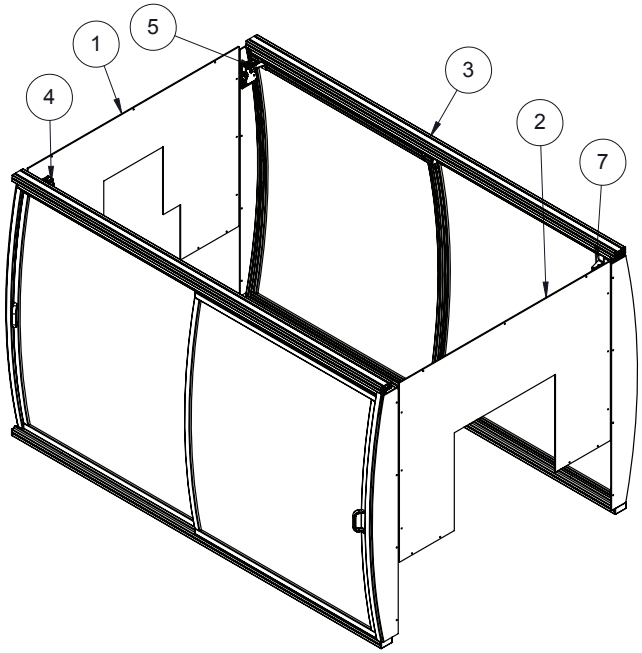


| BILL OF MATERIALS | | | |
|---|---|---|---|
| ITEM | QTY | NUMBER | DESCRIPTION |
| 1 | 1 | 372440 | GUARD, DIVIDER, DYNAMIC, INFEED |
| 2 | 1 | 384618 | GUARD, DIVIDER, DYNAMIC, DISCHARGE |
| 3 | 1 | 848454 | KIT, DOOR, SLIDING, DYN DIVIDER, 73 HIGH, 117.68 LG |
| 4 | 1 | 293505 | BKT, MTG, PIN, SWITCH, 4" LONG |
| 5 | 1 | 293505-001 | BKT, MTG, PIN, SWITCH, 4" LONG |
| 6 | 1 | 358541 | BKT, MTG, KEY, SWITCH, INTERLOCK |
| 7 | 1 | 358541-001 | BKT, MTG, PIN, SWITCH, 4 LG, LH |
| 8 | 4 | 369962 | PLT, MTG, SWITCH, DOOR |
| 9 | 2 | 372607 | PANEL, GUARD, END |
| 10 | 2 | 372608 | PANEL, GUARD, END |

NOTES
- INTERPRET PER ASME Y14.5M-1994.
- DIMENSIONS ARE IN INCHES [mm].
- DIMENSIONS IN PARENTHESES FOR REFERENCE ONLY.
- BREAK SHARP EDGES AND CORNERS.
- PROPRIETARY NOTICE: THIS INFORMATION IS THE PROPERTY OF ARPAC LLC AND SHALL NOT BE USED FOR ANY PURPOSE OTHER THAN THAT FOR WHICH IT WAS OBTAINED.
- CREATED IN SOLIDWORKS 2013.

CREATED IN SOLIDWORKS 2013

ARPAC A DURAVANT COMPANY
9555 W. Irving Park Rd.
Schiller Park, IL 60176
www.arpac.com

| | | |
|---|---|---|
| MODEL | FILE \ CONFIG | 383433\383433 |
| | SIMILAR TO | -- |
| | DATE CREATED | Thursday, July 12, 2012 4:16:01 PM |
| | DATE UPDATED | Thursday, April 15, 2021 11:50:24 AM |
| | UPDATED BY | Gibran.Mota |
| DRAFT | DATE CREATED | Thursday, September 13, 2012 10:40:30 AM |
| | DATE UPDATED | Thursday, April 15, 2021 11:50:11 AM |
| | UPDATED BY | Gibran.Mota |

SIZE: B
SCALE: 1:48
3RD ANGLE
UNITS: INCH
TOLERANCES
X/X: ±1/32
X.XX: ±.015
X.XXX: ±.005
ANGLES: ±1°

MATERIAL: SEE BILL OF MATERIALS
FINISH: NONE

DESCRIPTION: ASSY, GUARDS, DIVIDER, DYNAMIC, 48" ELEV
NUMBER: 383433

"C:\nVenia_Vault\Designs_CORRUGATED\TS-2300\220562-1-1\383433.slddrw" accessed Thursday, April 15, 2021.

SHEET 1 OF 1

ARPAC-D SIZE FORMAT REV. 1

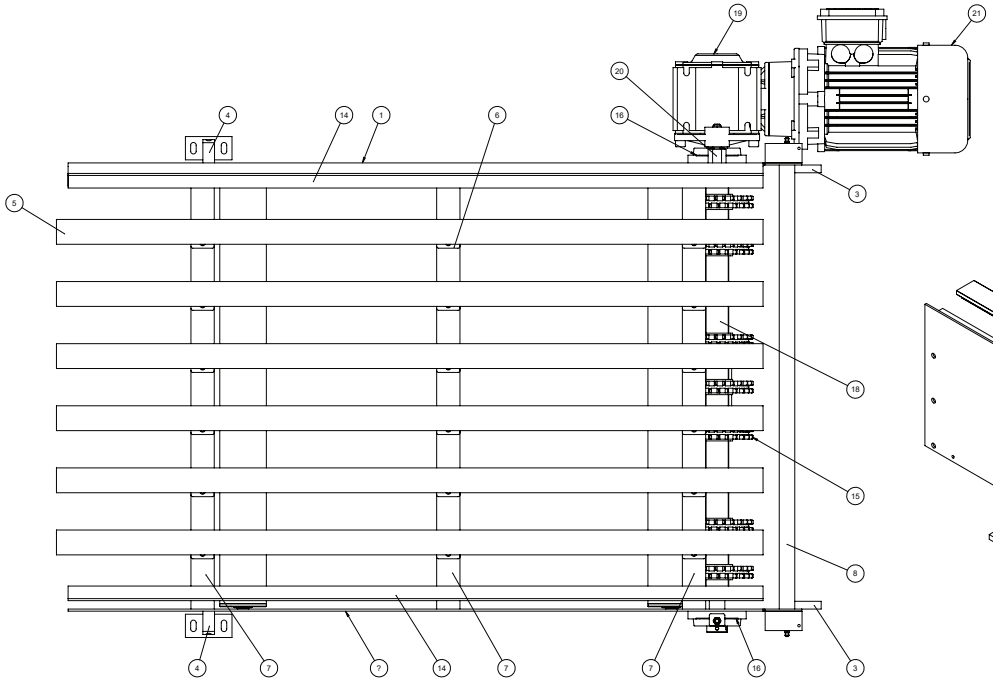


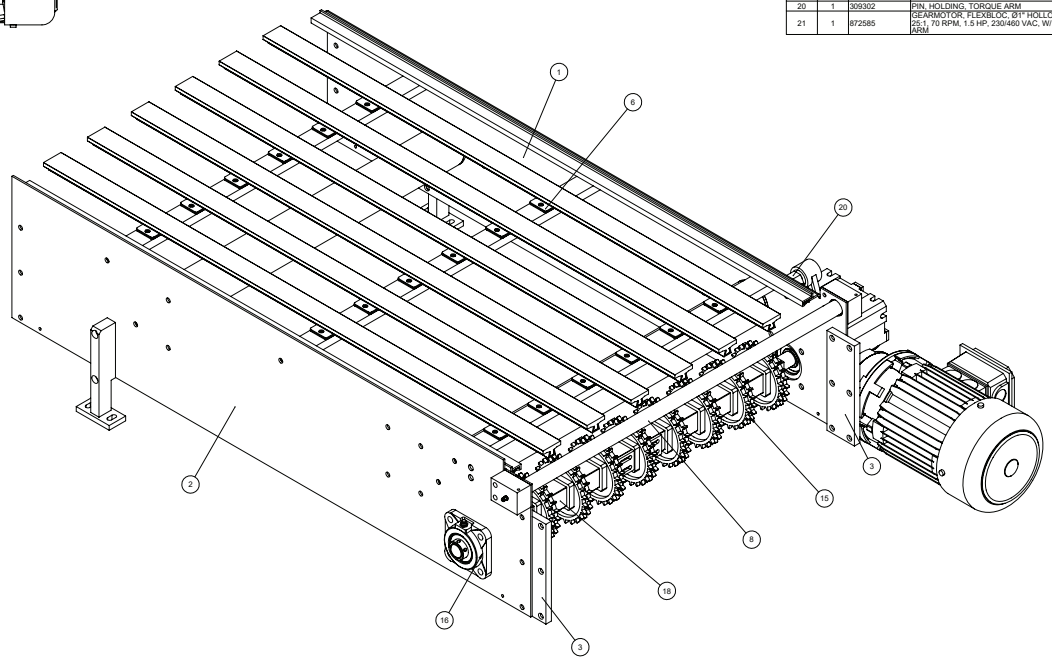


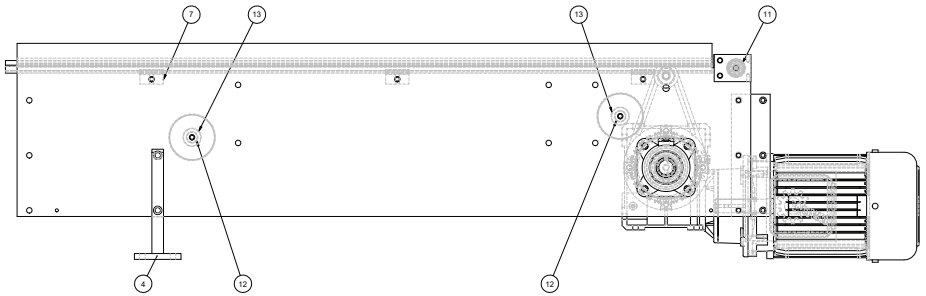


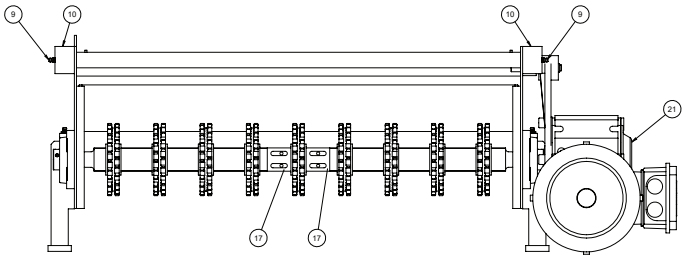


BILL OF MATERIALS

| ITEM | QTY | NUMBER | DESCRIPTION |
|---|---|---|---|
| 1 | 1 | 372298-100 | PLT, SIDE, CONV, SHORT, DRIVE, 1.0 HP |
| 2 | 1 | 372298-101 | PLT, SIDE, CONV, SHORT, DRIVE, 1.0 HP |
| 3 | 2 | 315002 | PLT, CONNECTING, CONV, DIVIDER, DYNAMIC, CSINK |
| 4 | 2 | 284097 | ASSY, WLDMT, SUPPORT, CARRIER |
| 5 | 6 | 288207 | STRIP, WEAR, CONV, DIVIDER, DYNAMIC |
| 6 | 18 | 801359 | CLAMP, RAIL, SINGLE, 1.5 LG, SS, ROUND HOLE |
| 7 | 3 | 345146 | CROSSBAR, INTERMEDIATE |
| 8 | 1 | 316168-006 | SHAFT, IDLER, CONV, INFEED |
| 9 | 2 | 828156 | FTG, GREASE, STRAIGHT, SS, 1/4-28 |
| 10 | 2 | 300344 | BEARING SUPPORT |
| 11 | 2 | 810473 | BRG, CART, 1/2 X 1-1/8 X 5/16 LG, SS,DOUBLE SEALED |
| 12 | 2 | 309572-009 | SHAFT, IDLER |
| 13 | 2 | 300373 | DEFLECTION ROLLER |
| 14 | 2 | 850128 | EXTRUSION, UHMW, J-LEGS, 10' LG, FOR 11GA SHEET |
| 15 | 9 | 839679 | SPROCKET, 24T, EZ TRACKING GREY ACETAL,1.5"SQ BORE |
| 16 | 2 | 839632 | BRG, FLG, 1 ID, 4-BOLT |
| 17 | 2 | 288168 | STOP, PINION, CENTRAL |
| 18 | 1 | 345145 | SHAFT, DRIVE, SQ, CONVEYOR, 1" DIA |
| 19 | 1 | 283569 | WSHR, SPECIAL |
| 20 | 1 | 309302 | PIN, HOLDING, TORQUE ARM |
| 21 | 1 | 872585 | GEARMOTOR, FLEXBLOC, Ø1" HOLLOW SHAFT, 26:1, 70 RPM, 1.5 HP, 230/460 VAC, W/ TORQUE ARM |

| REV | DATE | BY | NOTE |
|---|---|---|---|
| | | | REVISIONS |

NOTES
- INTERPRET PER ASME Y14.5M-1994.
- DIMENSIONS ARE IN INCHES [mm].
- DIMENSIONS IN PARENTHESES FOR REFERENCE ONLY.
- BREAK SHARP EDGES AND CORNERS.
- PROPRIETARY NOTICE: THIS INFORMATION IS THE PROPERTY OF ARPAC LLC AND SHALL NOT BE USED FOR ANY PURPOSE OTHER THAN THAT FOR WHICH IT WAS OBTAINED.
- CREATED IN SOLIDWORKS 2018.

CREATED IN SOLIDWORKS 2018

| | | |
|---|---|---|
| 1 | FILE \ CONFIG | 384621\384621 |
| 2 | SIMILAR TO | – |
| 3 | DATE CREATED | Friday, July 6, 2012 11:02:53 AM |
| 4 | DATE UPDATED | Monday, May 3, 2021 8:43:15 AM |
| | UPDATED BY | sandhar |
| 1 | DATE CREATED | Thursday, April 15, 2021 9:30:56 AM |
| 5 | DATE UPDATED | Monday, May 3, 2021 8:43:16 AM |
| 5 | UPDATED BY | sandhar |

ARPAC
A DEXTERITY COMPANY
8900 W. Irving Park Rd.
Schiller Park, IL 60176
www.arpac.com

| SIZE | SCALE | MATERIAL | DESCRIPTION |
|---|---|---|---|
| D | 1:4 | SEE BILL OF MATERIALS | ASSY, CONV, SHORT, DIVIDER, DYNAMIC |
| 3RD ANGLE | UNITS | | |
| | INCH | | |
| TOLERANCES: X.XX: ±1/32 X.XX: ±.015 X.XXX: ±.005 ANGLES: ±1° | | FINISH: PART OF ASSEMBLY | NUMBER: 384621 |

SHEET 1 OF 1

"C:\mVenia_Vault\Designs_CORRUGATED\TS-2309220562-1-\384621.sldbrw" accessed Monday, May 3, 2021.

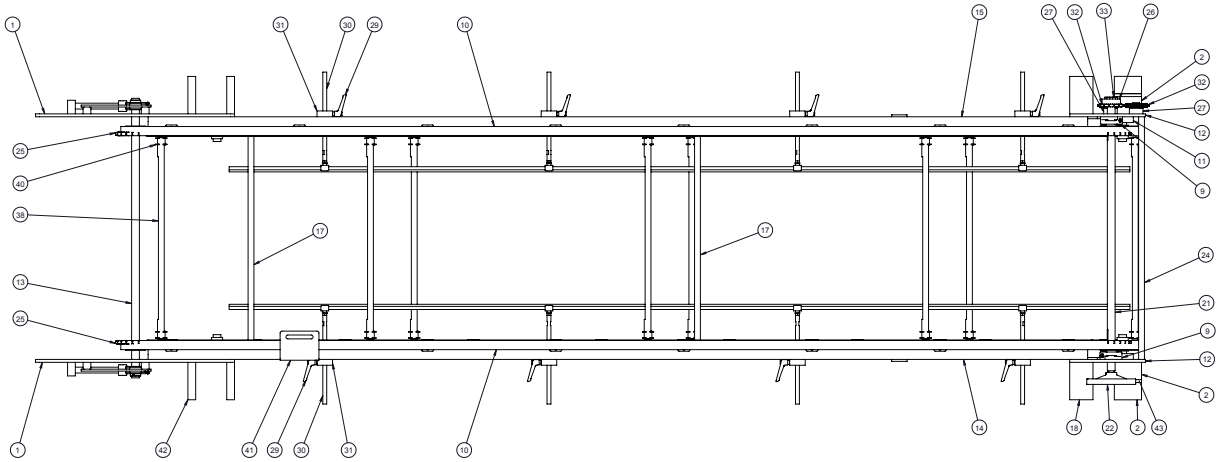

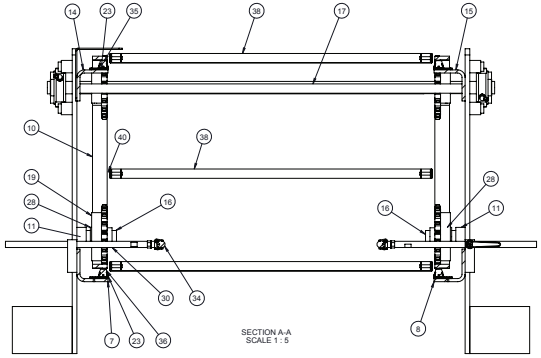


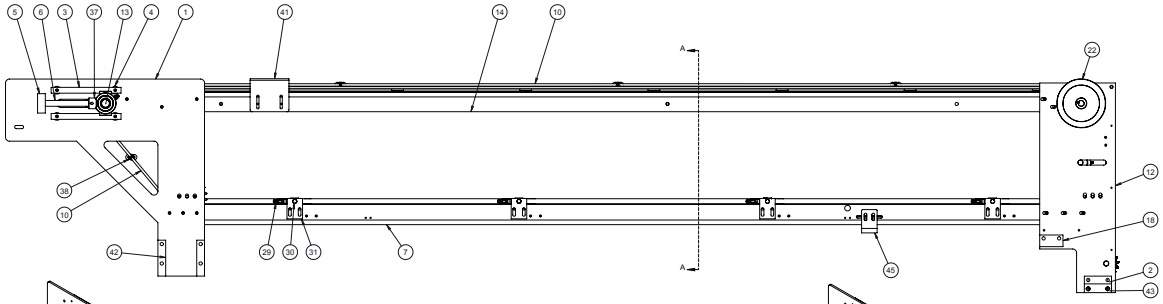

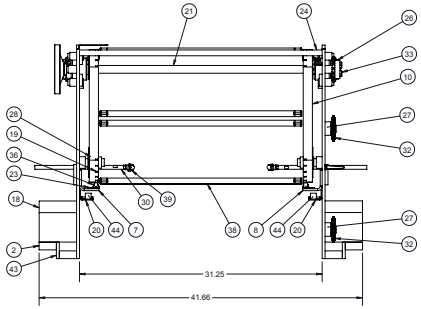


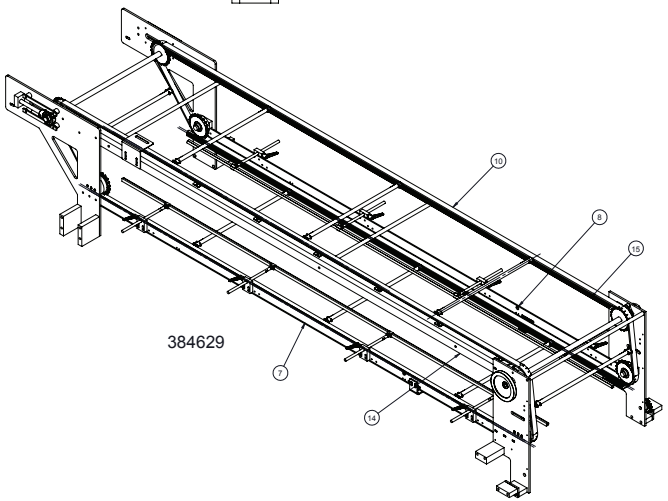

384629

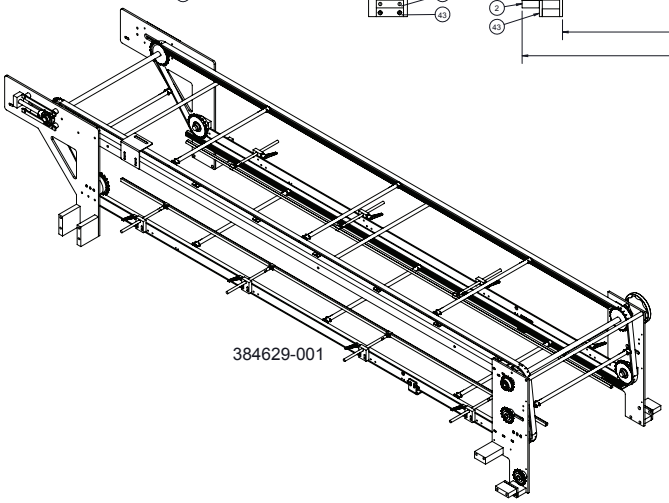

384629-001

| ITM | QTY | PART NUM | DESCRIPTION |
|---|---|---|---|
| 45 | 2 | 372985 | BKT, SUPPORT, PLATE, DEAD |
| 44 | 2 | 372986 | SPACER, SUPPORT, PLATE, DEAD |
| 43 | 2 | 372980 | PLT, MTG, ASSY, BAR, FLIGHT |
| 42 | 4 | 372979-001 | PLT, MTG, ASSY, BAR, FLIGHT |
| 41 | 1 | 282805 | BKT, PROX |
| 40 | 16 | 807284-001 | LINK, CONN, ATTACH, #60, D-1, SPECIAL 1-1/2 LG, EXTENDED PIN |
| 39 | 8 | 807831 | CLIP, RAIL, SELFTIGHTENING, 5/16 STUD X 5/8 LG, SS, HEAVY DUTY |
| 38 | 8 | 221666 | FLIGHT BAR |
| 37 | 2 | 802736 | BRG, TAKE-UP, 1 ID, 3/4-10 TAPPED END |
| 36 | 2 | 187583 | GUIDE, CHAIN #60 |
| 35 | 2 | 187582 | GUIDE, CHAIN #60 |
| 34 | 2 | 815212-003 | RAIL, GUIDE, ROUND, SS, 12' LG |
| 33 | 1 | 803668-001 | LOCKING DEVICE, KEYLESS 1" |
| 32 | 2 | 800905 | SPKT, 50BB15H, IDLER, 5/8 ID, HARDENED TEETH |
| 31 | 8 | 115939 | BLOCK, GUIDE, PRODUCT |
| 30 | 8 | 845483 | ROD, ADJ, 1/2 DIA X 12 LG, 5/16-18 TAPPED THREAD, SS |
| 29 | 8 | 823126 | HDL, ADJ, ZINC, 2-1/2 LG 5/16-18 X 1.26 STUD |
| 28 | 4 | 803841 | BRG, CART, 1 X 2.0472 X 1-47/64 LG, SEALED, LOCK COLLAR ID, PRESS FIT OD |
| 27 | 2 | 187508 | SPACER, TENSIONER, FLIGHT BAR |
| 26 | 1 | 188961 | SPKT, 50B15, MOD, 1.969 BORE, W/O KEY |
| 25 | 4 | 234677 | SPKT, 60B20, MOD., 1.000 BORE, SPECIAL |
| 24 | 1 | 126781 | SUPPORT, ROD |
| 23 | 32 | 801359 | CLAMP, RAIL, SINGLE, 1.5 LG, SS, ROUND HOLE |
| 22 | 1 | 108515 | HAND WHEEL COLLATOR |
| 21 | 1 | 300150 | SHAFT, DRIVE, FLIGHT BAR |
| 20 | 2 | 192837 | SUPPORT, DEAD, PLT, BAR, FLIGHT |
| 19 | 4 | 116067 | SPKT, 60B20, MOD.,2.047 BORE |
| 18 | 2 | 384631 | BLK, MTG, ASSY, BAR, FLIGHT |
| 17 | 2 | 221933 | CROSS MEMBER, FLIGHT BAR |
| 16 | 4 | 188684 | SHAFT, IDLER |
| 15 | 1 | 188679-002 | RAIL, GUIDE, TOP, LH |
| 14 | 1 | 188679-001 | RAIL, GUIDE, TOP, RH |
| 13 | 1 | 274433 | SHAFT, TAIL |
| 12 | 2 | 286508 | PLT, VER, TAIL END, RH |
| 11 | 4 | 126787 | PLT, NUT |
| 10 | 48 | 800486 | CHAIN, RLR, #60 |
| 9 | 2 | 827116 | BRG, FLG, 1 ID, 2-BOLT, 3.89 BOLT CNTRS |
| 8 | 1 | 286509-002 | RAIL, GUIDE, BOTTOM, LH |
| 7 | 1 | 286509-001 | RAIL, GUIDE, BOTTOM, RH |
| 6 | 2 | 189379 | SHAFT |
| 5 | 2 | 192827 | BLOCK, GUIDE, TENSION |
| 4 | 8 | 193855 | SPACER |
| 3 | 4 | 112721 | TIE, BAR BEARING |
| 2 | 4 | 372982 | BLK, MTG, ASSY, BAR, FLIGHT |
| 1 | 2 | 286507 | PLT, SIDE |

BILL OF MATERIALS

ARPAC
9511 WEST RIVER ST.
SCHILLER PARK, IL 60176

UNLESS OTHERWISE SPECIFIED
ALL DIMENSIONAL TOLERANCES:
FRACTIONS ± 1/64
TWO (2) DECIMALS ± 0.010
THREE (3) DECIMALS ± 0.005
ANGLES ± 0.5°

DRAWN: 04/152021 BY: GM SCALE: 1:8 SIZE: D
RELEASED: FILENAME: 384629 APPROVED BY:
DESCRIPTION:
ASSY, BAR, FLIGHT, PACING, TS-2000

DRAWING NUMBER:
384629

ARPAC B SIZE FORMAT R5.1

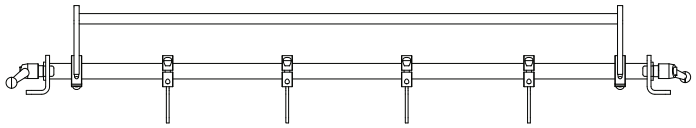

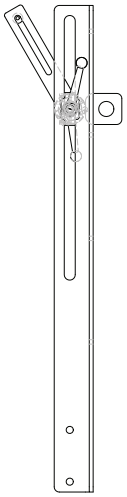

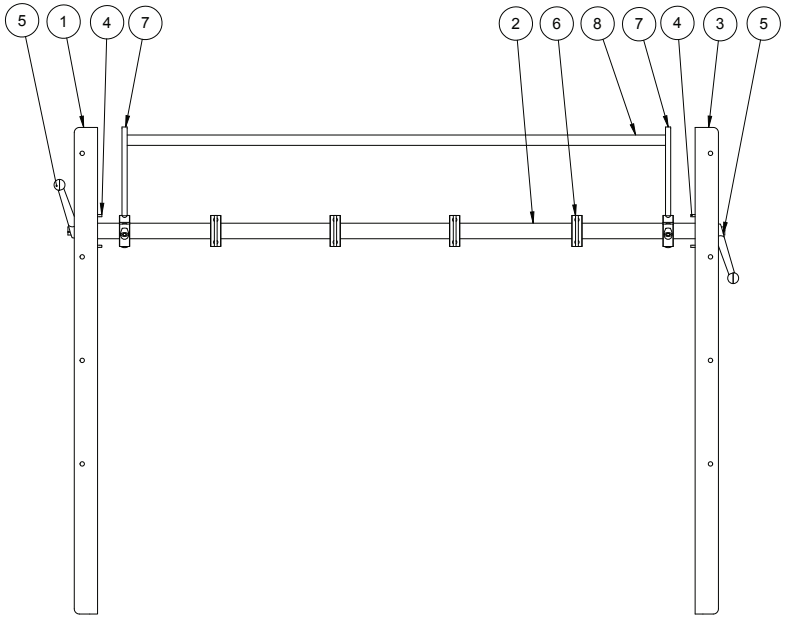


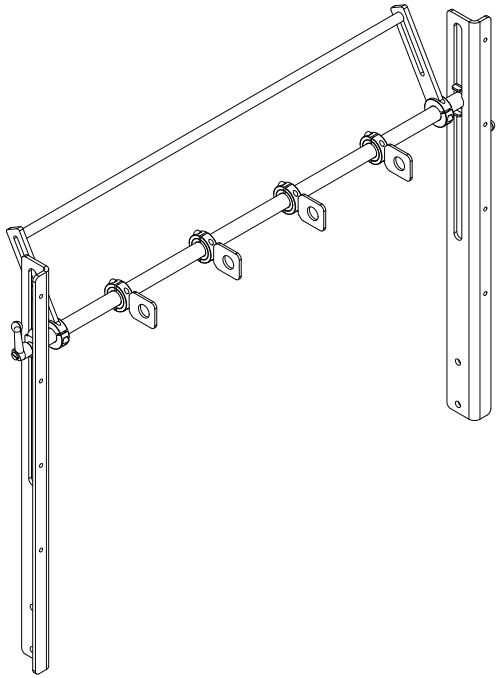

| BILL OF MATERIALS | | | |
|---|---|---|---|
| ITEM | QTY | NUMBER | DESCRIPTION |
| 1 | 1 | 286911 | POST MTG DETECTOR |
| 2 | 1 | 214781-027 | SHAFT, MTG, DETECTOR, BOTTLE, 29.11 LG |
| 3 | 1 | 286911-001 | POST MTG DETECTOR |
| 4 | 2 | 286907 | INDICATOR |
| 5 | 2 | 808969 | HDL, ADJ, SS, 2.56 LG 5/16-18 X .59 STUD |
| 6 | 4 | 225647 | WLDMT, BKT, MTG, P.E. |
| 7 | 2 | 276415 | BKT, MTG, SHAFT |
| 8 | 1 | 276242-002 | ROD, GUIDE |

| REV | DATE | BY | NOTE |
|---|---|---|---|
| REVISIONS | | | |

NOTES
- INTERPRET PER ASME Y14.5M-1994.
- DIMENSIONS ARE IN INCHES [mm].
- DIMENSIONS IN PARENTHESES FOR REFERENCE ONLY.
- BREAK SHARP EDGES AND CORNERS.
- PROPRIETARY NOTICE: THIS INFORMATION IS THE PROPERTY OF ARPAC LLC AND SHALL NOT BE USED FOR ANY PURPOSE OTHER THAN THAT FOR WHICH IT WAS OBTAINED.
- CREATED IN SOLIDWORKS 2018.

CREATED IN SOLIDWORKS 2018

ARPAC A DURAVANT COMPANY
9555 W. Irving Park Rd.
Schiller Park, IL 60176
www.arpac.com

| | | |
|---|---|---|
| MODEL | FILE \ CONFIG | 384636\384636 |
| | SIMILAR TO | |
| | DATE CREATED | Tuesday, March 13, 2012 5:12:20 PM |
| | DATE UPDATED | Friday, April 16, 2021 8:59:57 AM |
| | UPDATED BY | Gibran.Mota |
| DRAFT | DATE CREATED | Wednesday, August 26, 2020 4:16:26 PM |
| | DATE UPDATED | Friday, April 16, 2021 8:59:49 AM |
| | UPDATED BY | Gibran.Mota |

SIZE: B
SCALE: 1:6
3RD ANGLE
UNITS: INCH
TOLERANCES
X/X: ±1/32
X.XX: ±.015
X.XXX: ±.005
ANGLES: ±1°

MATERIAL: SEE BILL OF MATERIALS

FINISH: NONE

DESCRIPTION: ASSY, DETECT, PRODUCT, 4-LANES, 28.86" WIDE

NUMBER: 384636

"C:\nVenia_Vault\Designs_CORRUGATED\TS-2300\220562-1-1\384636.slddrw" accessed Friday, April 16, 2021.

SHEET 1 OF 1

ARPAC B SIZE FORMAT R5.1

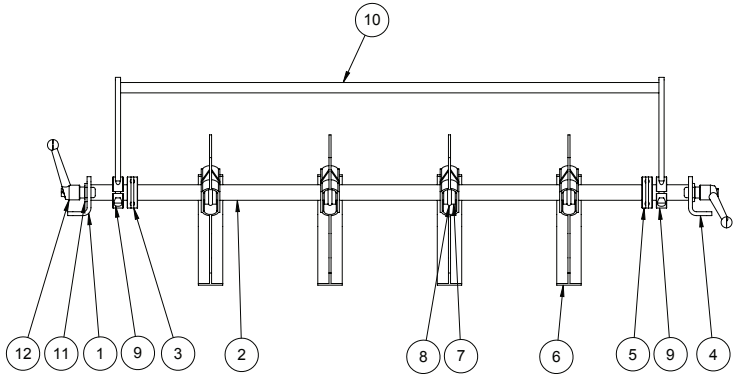


| BILL OF MATERIALS | | | |
|---|---|---|---|
| ITEM | QTY | NUMBER | DESCRIPTION |
| 1 | 1 | 309540 | POST, MTG, DETECTOR, TALL |
| 2 | 1 | 214781-027 | SHAFT, MTG, DETECTOR, BOTTLE, 29.11 LG |
| 3 | 1 | 225647 | WLDMT, BKT, MTG, P.E. |
| 4 | 1 | 309540-001 | POST, MTG, DETECTOR, TALL |
| 5 | 1 | 238514 | WLDMT, BKT, MTG, P.E., REFLECTOR |
| 6 | 4 | 357429 | LEVELER, CONTACT |
| 7 | 4 | 283414 | COLLAR, LOCATOR, FINGER |
| 8 | 4 | 842149 | SPRING, EXTENSION |
| 9 | 2 | 276415 | BKT, MTG, SHAFT |
| 10 | 1 | 276242-002 | ROD, GUIDE |
| 11 | 2 | 286907 | INDICATOR |
| 12 | 2 | 808969 | HDL, ADJ, SS, 2.56 LG 5/16-18 X .59 STUD |

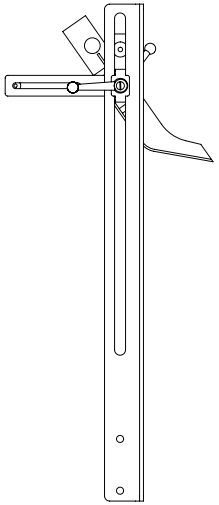

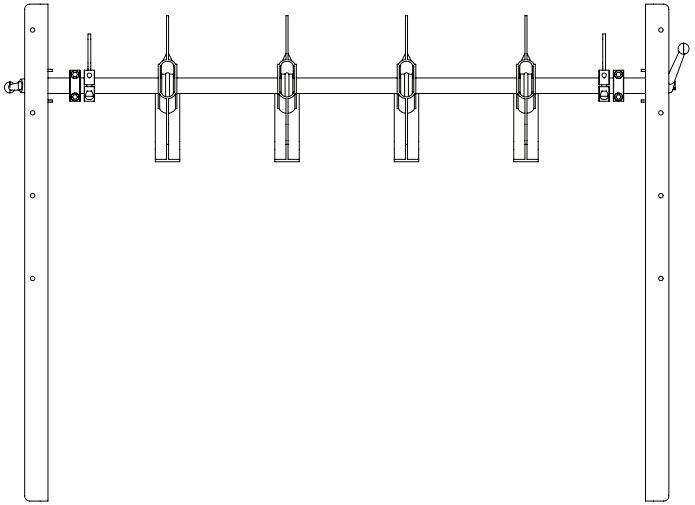

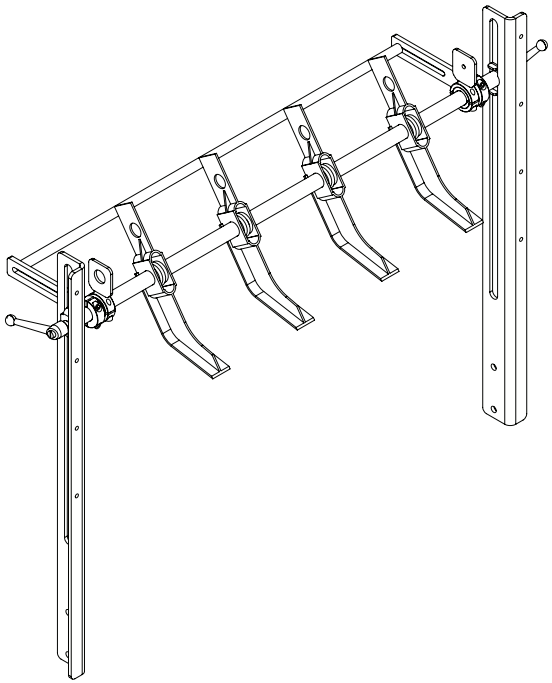

| REV | DATE | BY | NOTE |
|---|---|---|---|
| REVISIONS | | | |

NOTES
- INTERPRET PER ASME Y14.5M-1994.
- DIMENSIONS ARE IN INCHES [mm].
- DIMENSIONS IN PARENTHESES FOR REFERENCE ONLY.
- BREAK SHARP EDGES AND CORNERS.
- PROPRIETARY NOTICE: THIS INFORMATION IS THE PROPERTY OF ARPAC LLC AND SHALL NOT BE USED FOR ANY PURPOSE OTHER THAN THAT FOR WHICH IT WAS OBTAINED.
- CREATED IN SOLIDWORKS 2018.

CREATED IN SOLIDWORKS 2018

| | | |
|---|---|---|
| MODEL | FILE \ CONFIG | 384637\384637 |
| | SIMILAR TO | -- |
| | DATE CREATED | Tuesday, March 13, 2012 5:12:20 PM |
| | DATE UPDATED | Monday, April 19, 2021 8:43:12 AM |
| | UPDATED BY | sarcher |
| DRAFT | DATE CREATED | Friday, August 28, 2020 11:37:41 AM |
| | DATE UPDATED | Monday, April 19, 2021 8:43:12 AM |
| | UPDATED BY | sarcher |

ARPAC A DURAVANT COMPANY
9555 W. Irving Park Rd.
Schiller Park, IL 60176
www.arpac.com

SIZE: B
SCALE: 1:6
3RD ANGLE
UNITS: INCH
TOLERANCES
X/X: ±1/32
X.XX: ±.015
X.XXX: ±.005
ANGLES: ±1°

MATERIAL: SEE BILL OF MATERIALS
FINISH: NONE

DESCRIPTION: ASSY, DETECT, PRODUCT, 4-LANE, 28.86" WIDE
NUMBER: 384637

"C:\nVenia_Vault\Designs_CORRUGATED\TS-2300\220562-1-1\384637.slddrw" accessed Monday, April 19, 2021.

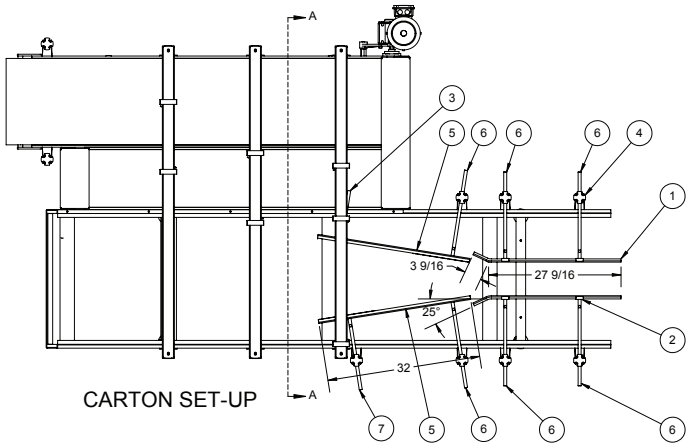


CARTON SET-UP

| BILL OF MATERIALS | | | |
|---|---|---|---|
| ITEM | QTY | NUMBER | DESCRIPTION |
| 1 | 4 | 815212-003 | RAIL, GUIDE, ROUND, SS, 12' LG |
| 2 | 4 | 801312 | CLAMP, RAIL, DOUBLE, 1.5 LG, SS, 2.5 CENTERS, ROUND HOLE |
| 3 | 1 | 810110 | ROD, ADJ, 5/8 X 6 LG, 5/16-18 TAP, SS |
| 4 | 9 | 801340 | BKT, SWIVEL, 5/8 ROD, W/KNOB AND EYLET, POLYAMIDE |
| 5 | 1 | 827493-001 | SPEEDRAIL, SB, 2 STRAND, 6' LG |
| 6 | 6 | 807728 | ROD, ADJ, 5/8 DIA X 18 LG, 3/8-16 TAPPED THREAD, SS |
| 7 | 1 | 801289 | ROD, ADJ, 5/8 DIA X 15 LG, 3/8-16 TAPPED THREAD, SS |
| 8 | 1 | 385047 | BKT, CLAMP |
| 9 | 1 | 385049 | PLT, MTG, SHAFT |
| 10 | 1 | 385050 | SHAFT, SUPPORT, GUIDE |
| 11 | 1 | 283373 | BLK, CLAMP |

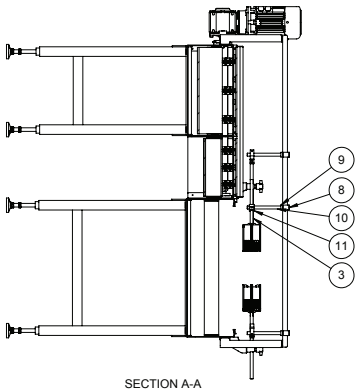


SECTION A-A

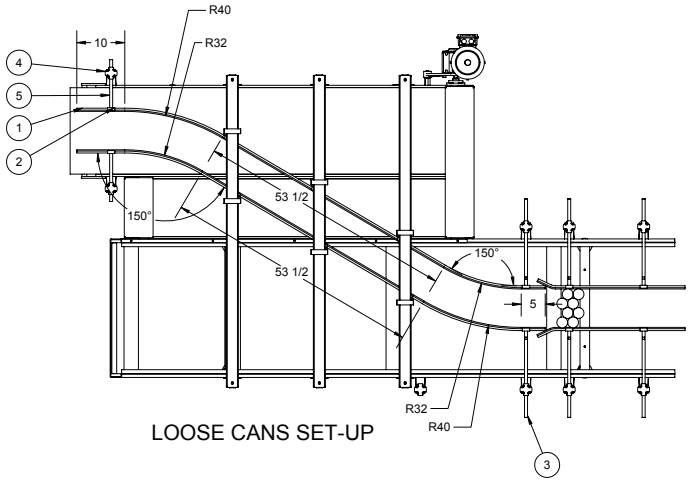


LOOSE CANS SET-UP

| BILL OF MATERIALS | | | |
|---|---|---|---|
| ITEM | QTY | NUMBER | DESCRIPTION |
| 1 | 4 | 815212-003 | RAIL, GUIDE, ROUND, SS, 12' LG |
| 2 | 14 | 801312 | CLAMP, RAIL, DOUBLE, 1.5 LG, SS, 2.5 CENTERS, ROUND HOLE |
| 3 | 6 | 807728 | ROD, ADJ, 5/8 DIA X 18 LG, 3/8-16 TAPPED THREAD, SS |
| 4 | 9 | 801340 | BKT, SWIVEL, 5/8 ROD, W/KNOB AND EYLET, POLYAMIDE |
| 5 | 2 | 810110 | ROD, ADJ, 5/8 X 6 LG, 5/16-18 TAP, SS |
| 6 | 6 | 385051 | POST, SUPPORT, GUIDE |
| 7 | 3 | 385044 | CHANNEL, SUPPORT, GUIDE |
| 8 | 6 | 385045 | CLAMP, MTG, GUIDE |
| 9 | 6 | 385047 | BKT, CLAMP |
| 10 | 6 | 385049 | PLT, MTG, SHAFT |
| 11 | 6 | 385050 | SHAFT, SUPPORT, GUIDE |

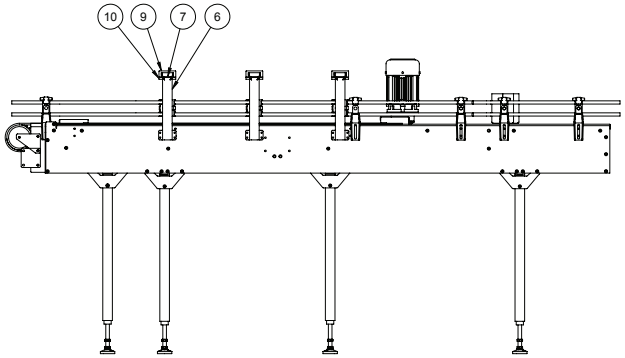


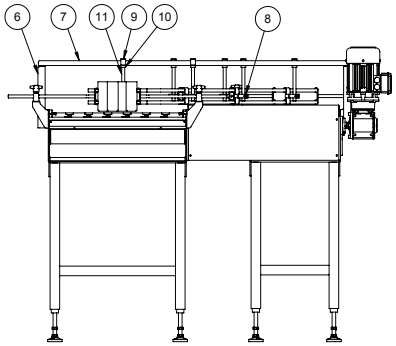


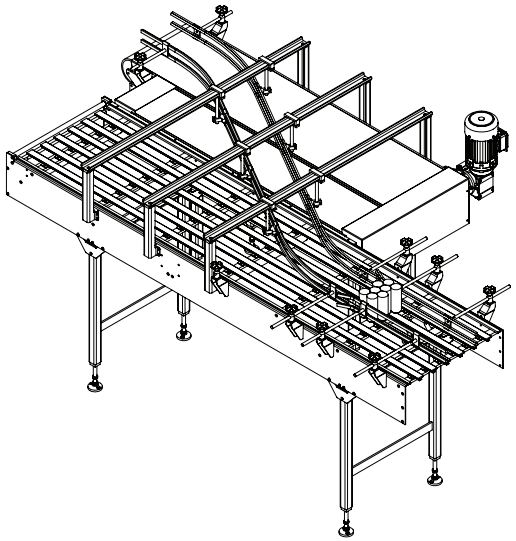

| REV | DATE | BY | NOTE |
|---|---|---|---|
| REVISIONS | | | |

NOTES
- INTERPRET PER ASME Y14.5M-1994.
- DIMENSIONS ARE IN INCHES [mm].
- DIMENSIONS IN PARENTHESES FOR REFERENCE ONLY.
- BREAK SHARP EDGES AND CORNERS.
- PROPRIETARY NOTICE: THIS INFORMATION IS THE PROPERTY OF ARPAC LLC AND SHALL NOT BE USED FOR ANY PURPOSE OTHER THAN THAT FOR WHICH IT WAS OBTAINED.
- CREATED IN SOLIDWORKS 2018.

CREATED IN SOLIDWORKS 2018

ARPAC A DURAVANT COMPANY 9555 W. Irving Park Rd. Schiller Park, IL 60176 www.arpac.com

| | | |
|---|---|---|
| MODEL | FILE \ CONFIG | 384642\Loose Cans |
| | SIMILAR TO | -- |
| | DATE CREATED | Friday, April 16, 2021 11:57:27 AM |
| | DATE UPDATED | Friday, May 7, 2021 1:52:59 PM |
| | UPDATED BY | sarcher |
| DRAFT | DATE CREATED | Tuesday, April 20, 2021 11:00:24 AM |
| | DATE UPDATED | Friday, May 7, 2021 1:15:40 PM |
| | UPDATED BY | sarcher |

| SIZE | SCALE | MATERIAL | DESCRIPTION |
|---|---|---|---|
| C | 1:20 | SEE BILL OF MATERIALS | ASSY, GUIDES, ENTRY, DIVIDER, LANE |
| 3RD ANGLE | UNITS | | |
| | INCH | | |
| TOLERANCES | | FINISH | NUMBER |
| X/X: ±1/32<br>X.XX: ±.015<br>X.XXX: ±.005<br>ANGLES: ±1° | | NONE | 384642 |

ARPAC C SIZE FORMAT R5.1

| BILL OF MATERIALS | | | |
|---|---|---|---|
| ITEM | QTY | NUMBER | DESCRIPTION |
| 1 | 4 | 300373 | DEFLECTION ROLLER |
| 2 | 4 | 309572-009 | SHAFT, IDLER |
| 3 | 2 | 314799-015 | WLDMT, SUPPORT, CONV |
| 4 | 2 | 315005-003 | CROSSBAR, INTERMEDIATE, CSINK |
| 5 | 4 | 315016 | PLT, STIFF |
| 6 | 7 | 345146 | CROSSBAR, INTERMEDIATE |
| 7 | 1 | 372291 | PLT, SIDE, CONV, DIVIDER, DYNAMIC |
| 8 | 1 | 372291-001 | OPPOSITE |
| 9 | 1 | 372292 | STRIP, GUIDE, SIDE, BELT, CONV |
| 10 | 2 | 372303 | XBAR, END, CONV, INFEED |
| 11 | 1 | 372306 | ASSY, ROLLER, NOSE |
| 12 | 1 | 372311 | PLT, END, CONV |
| 13 | 6 | 801296-002 | RAIL, GUIDE, TEE, 1.60 W, 10' LG, SS |
| 14 | 42 | 801359 | CLAMP, RAIL, SINGLE, 1.5 LG, SS, ROUND HOLE |
| 15 | 4 | 841410 | LEVELER, ARTICULATING, 7400 # CAP, 3/4-10 STEM, 9.5 HIGH, CRS 3" BASE, 2 C'SUNK LAG HOLES, HEAVY LIP ON BASE |
| 16 | 2 | 850128 | EXTRUSION, UHMW, J-LEGS, 10' LG, FOR 11GA SHEET |

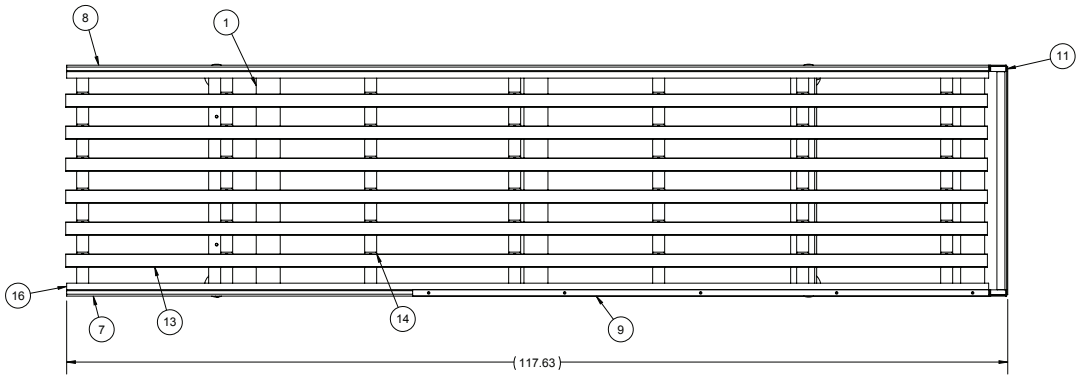


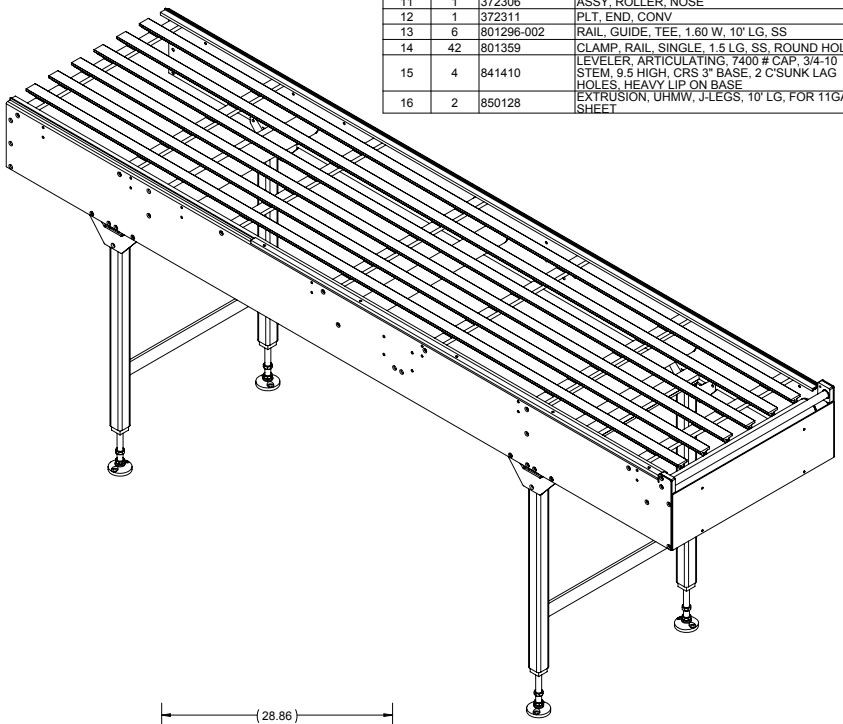

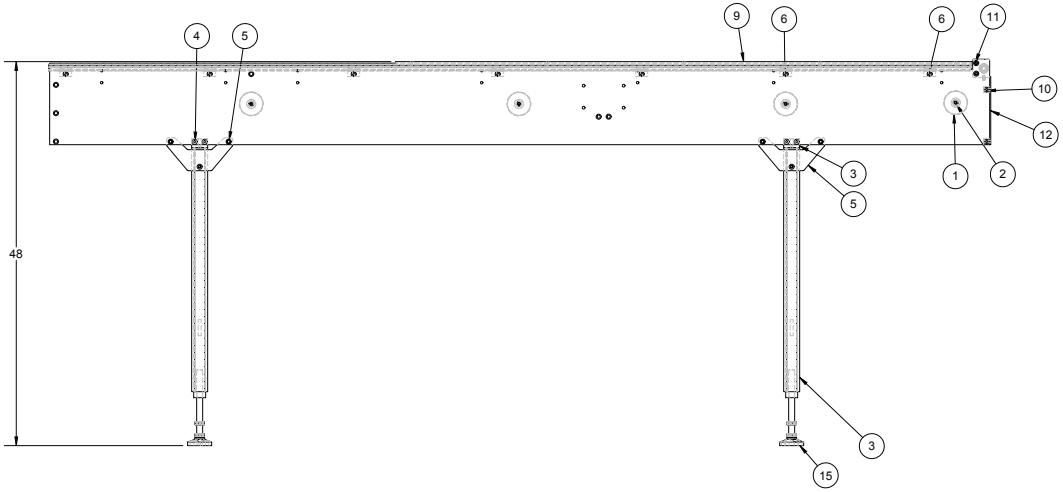


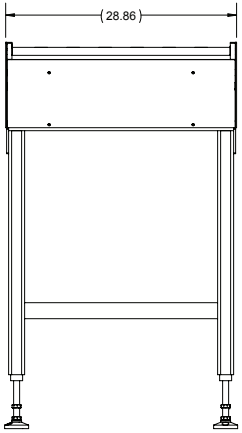


| REV | DATE | BY | NOTE |
|---|---|---|---|
| REVISIONS | | | |

NOTES
- INTERPRET PER ASME Y14.5M-1994.
- DIMENSIONS ARE IN INCHES [mm].
- DIMENSIONS IN PARENTHESES FOR REFERENCE ONLY.
- BREAK SHARP EDGES AND CORNERS.
- PROPRIETARY NOTICE: THIS INFORMATION IS THE PROPERTY OF ARPAC LLC AND SHALL NOT BE USED FOR ANY PURPOSE OTHER THAN THAT FOR WHICH IT WAS OBTAINED.
- CREATED IN SOLIDWORKS 2018.

CREATED IN SOLIDWORKS 2018

ARPAC A DURAVANT COMPANY
9555 W. Irving Park Rd.
Schiller Park, IL 60176
www.arpac.com

| MODEL | | |
|---|---|---|
| | FILE \ CONFIG | 384764\384764- NOSE ROLLER |
| | SIMILAR TO | |
| | DATE CREATED | Tuesday, April 20, 2021 |
| | DATE UPDATED | Wednesday, April 21, 2021 10:46:39 AM |
| | UPDATED BY | sarcher |
| DRAFT | DATE CREATED | Tuesday, April 20, 2021 |
| | DATE UPDATED | Wednesday, April 21, 2021 10:46:58 AM |
| | UPDATED BY | sarcher |

| SIZE | SCALE | MATERIAL | DESCRIPTION |
|---|---|---|---|
| C | 1:12 | SEE BILL OF MATERIALS | ASSY, CONV, INFEED, DIVIDER, LANE |
| 3RD ANGLE | UNITS | | |
| | INCH | | |
| TOLERANCES | | FINISH | NUMBER |
| X/X: ±1/32<br>X.XX: ±.015<br>X.XXX: ±.005<br>ANGLES: ±1° | | NONE | 384764 |

"C:\nVenia_Vault\Designs_CORRUGATED\TS-2300\220562-1-1\384764.slddrw" accessed Wednesday, April 21, 2021.

SHEET 1 OF 1

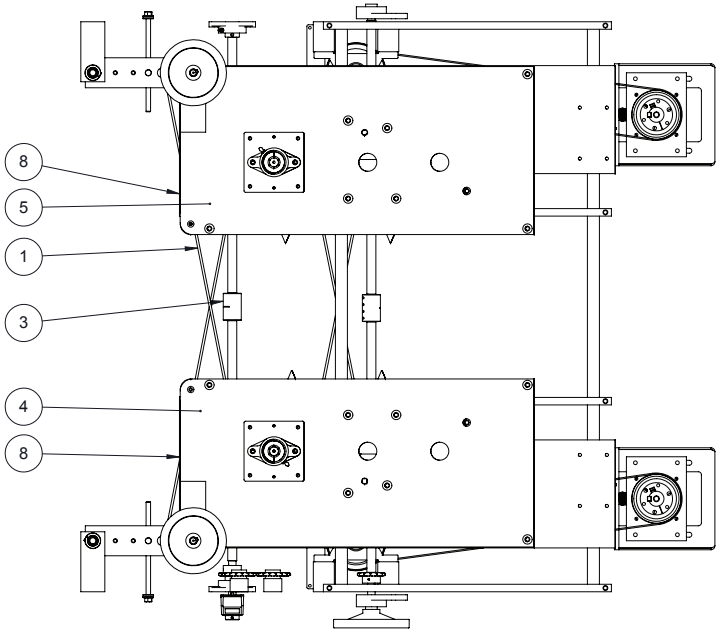


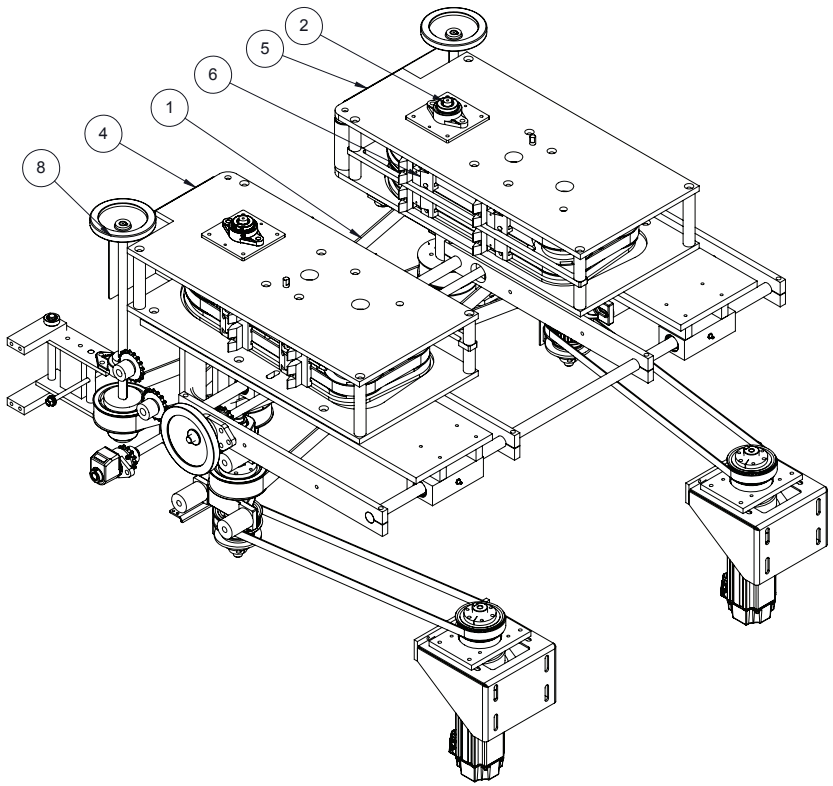


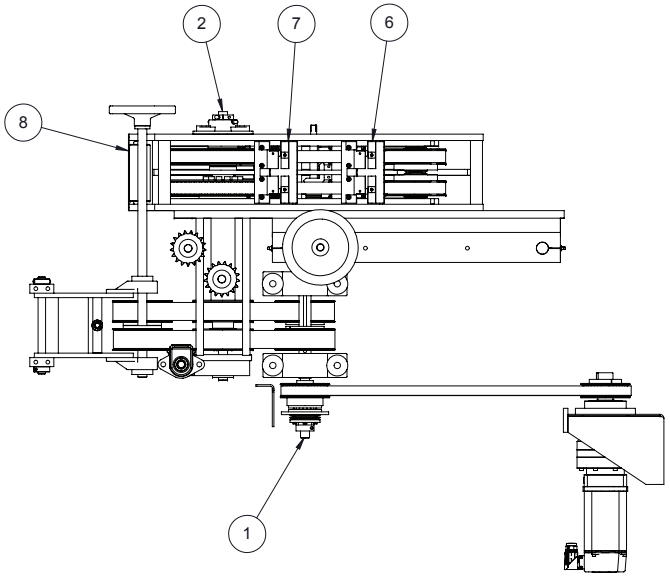


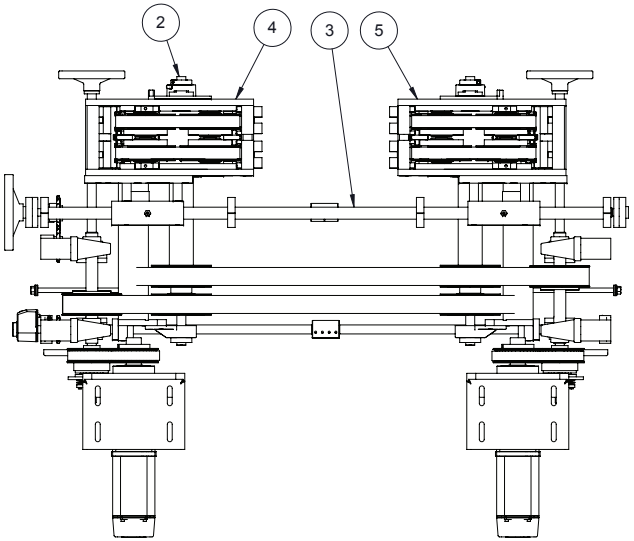


| ITM | QTY | PART NUM | DESCRIPTION |
|---|---|---|---|
| 8 | 2 | 371175 | PANEL, GUARD, COLLATOR |
| 7 | 4 | 369992-001 | ASSY, CARRIER, LUG, COLLATOR |
| 6 | 4 | 369992 | ASSY, CARRIER, LUG, COLLATOR |
| 5 | 1 | 384780 | ASSY, TRACK, COLLATOR, 60" LG BELT, LH |
| 4 | 1 | 384781 | ASSY, TRACK, COLLATOR, 60" LG BELT, RH |
| 3 | 1 | 286728 | ASSY, COLLATOR GUIDE & ADJ. |
| 2 | 2 | 364832 | ASSY, PULLEY, DRIVE, VERTICAL |
| 1 | 1 | 384783 | ASSY, DRIVE, COLLATOR, 460VAC, VPL SERVO |

BILL OF MATERIALS

ARPAC
9511 WEST RIVER ST.
SCHILLER PARK, IL 60176

UNLESS OTHERWISE SPECIFIED
ALL DIMENSIONAL TOLERANCES:

| | |
|---|---|
| FRACTIONS | ± 1/64 |
| TWO (2) DECIMALS | ± 0.010 |
| THREE (3) DECIMALS | ± 0.005 |
| ANGLES | ± 0.5° |

DRAWN: 4/22/2021 | BY: SRA | SCALE: 1:8 | SIZE: C

FILENAME: 384766

DESCRIPTION:
ASSY, COLLATOR, SIDE, SERVO, VPL, 60" LG BELT

DRAWING NUMBER:
384766

ARPAC C SIZE FORMAT R5

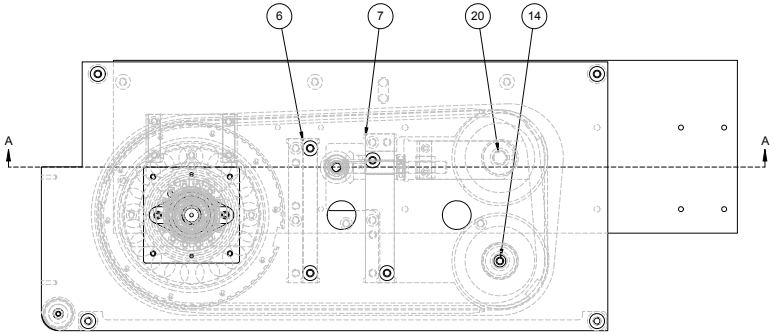


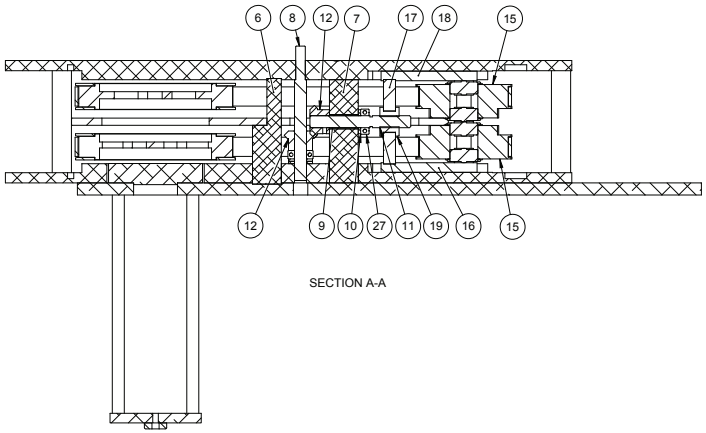


SECTION A-A

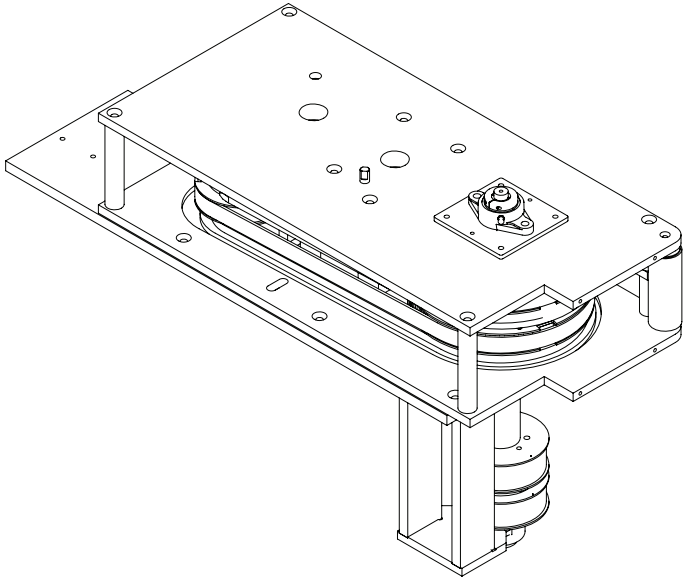

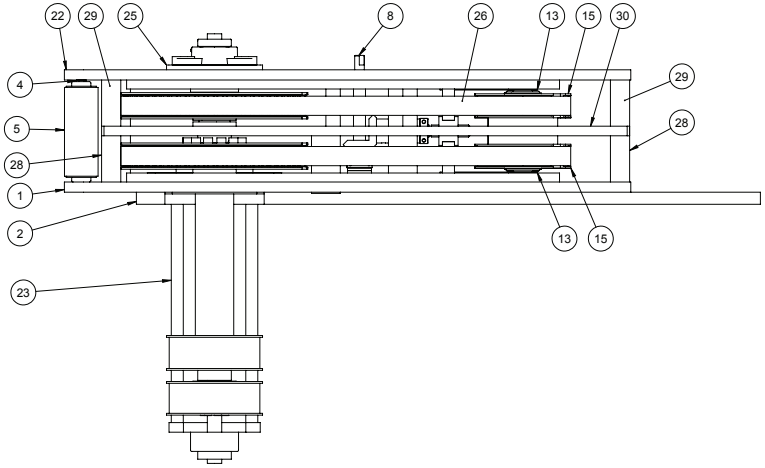


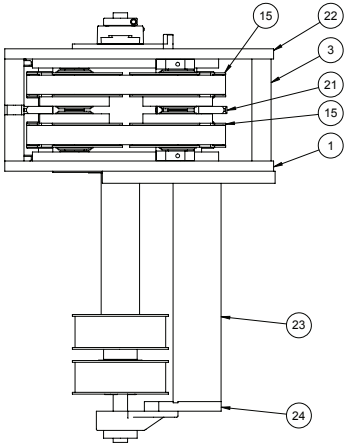


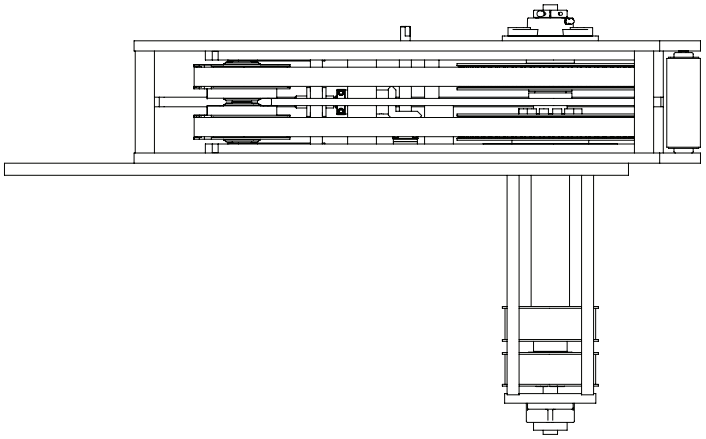

BILL OF MATERIALS

| ITEM | QTY | NUMBER | DESCRIPTION |
|---|---|---|---|
| 1 | 1 | 364844-001 | PLT, TRACK, COLLATOR, LOWER, LH |
| 2 | 1 | 364833-001 | PLT, BASE, COLLATOR, LH |
| 3 | 2 | 195481 | SPACER |
| 4 | 1 | 195482 | HEX, SHAFT, 5-5/16" LG |
| 5 | 1 | 101929-027 | RLR, IDLER, CRS, 1.750, BRG, FAFNIR NI PLT |
| 6 | 1 | 195485-001 | SPACER, LH |
| 7 | 1 | 364834-001 | BLOCK, LH |
| 8 | 1 | 364842 | SHAFT, ADJ., GEAR |
| 9 | 1 | 817259 | BUSH, OILITE, 0.627 X 0.753 X 1-1/2 LG |
| 10 | 3 | 800439 | WSHR, OILITE, 0.628 X 1.250 X 1/8 THK |
| 11 | 1 | 364843 | SCREW, TENSIONER |
| 12 | 2 | 370629 | GEAR, MITER, 18T, 20 DEG, 3/16 KEY, 5/8 BORE |
| 13 | 2 | 195479 | WASHER |
| 14 | 1 | 195480 | SHAFT, IDLER |
| 15 | 4 | 364836 | PULLEY, IDLER |
| 16 | 1 | 195472 | PLT, TOP, TENSIONER |
| 17 | 1 | 195474 | PLT |
| 18 | 1 | 195473 | PLT, BOTTOM, TENSIONER |
| 19 | 1 | 195477 | NUT |
| 20 | 1 | 195476 | SHAFT |
| 21 | 1 | 364835 | PLT, RETAINER |
| 22 | 1 | 364837-001 | PLT, TRACK, COLLATOR, UPPER, LH |
| 23 | 2 | 195483 | PLT |
| 24 | 1 | 195484 | PLT, 3 BOLT BRG MNT |
| 25 | 1 | 221045 | PLT, BRG, MTG |
| 26 | 2 | 855398 | BELT, TIMING, H PITCH, 1" W, 60" LG, 120 TEETH, ENDLESS, STEEL CORDS |
| 27 | 2 | 800596 | COLLAR, SHAFT, CLAMP, 2-PIECE, 5/8 |
| 28 | 2 | 195481-001 | SPACER, 2.407 LG |
| 29 | 2 | 286735 | SPACER |
| 30 | 1 | 371653 | GUIDE, MIDDLE |

| REV | DATE | BY | NOTE |
|---|---|---|---|
| | | | REVISIONS |

NOTES
- INTERPRET PER ASME Y14.5M-1994.
- DIMENSIONS ARE IN INCHES [mm].
- DIMENSIONS IN PARENTHESES FOR REFERENCE ONLY.
- BREAK SHARP EDGES AND CORNERS.
- PROPRIETARY NOTICE: THIS INFORMATION IS THE PROPERTY OF ARPAC LLC AND SHALL NOT BE USED FOR ANY PURPOSE OTHER THAN THAT FOR WHICH IT WAS OBTAINED.
- CREATED IN SOLIDWORKS 2013.

CREATED IN SOLIDWORKS 2013

ARPAC A DURAVANT COMPANY
9555 W. Irving Park Rd.
Schiller Park, IL 60176
www.arpac.com

| | | |
|---|---|---|
| MODEL | FILE \ CONFIG | 384780\Default |
| | SIMILAR TO | -- |
| | DATE CREATED | Thursday, May 4, 2017 10:17:09 AM |
| | DATE UPDATED | Wednesday, April 21, 2021 6:01:43 PM |
| | UPDATED BY | sarcher |
| DRAFT | DATE CREATED | Thursday, May 4, 2017 3:51:09 PM |
| | DATE UPDATED | Wednesday, April 21, 2021 6:01:24 PM |
| | UPDATED BY | sarcher |

| SIZE | SCALE |
|---|---|
| C | 1:5 |
| 3RD ANGLE | UNITS |
| | INCH |

TOLERANCES
X/X: ±1/32
X.XX: ±.015
X.XXX: ±.005
ANGLES: ±1°

MATERIAL: SEE BILL OF MATERIALS

FINISH: NONE

DESCRIPTION: ASSY, TRACK, COLLATOR, 60" LG BELT, LH

NUMBER: 384780

"C:\nVenia_Vault\Designs_CORRUGATED\TS-2300\220562-1-1\384780.slddrw" accessed Thursday, April 22, 2021.

SHEET 1 OF 1

ARPAC C SIZE FORMAT R5

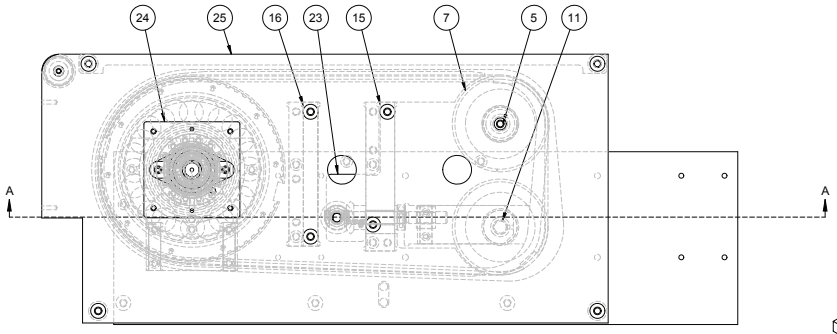


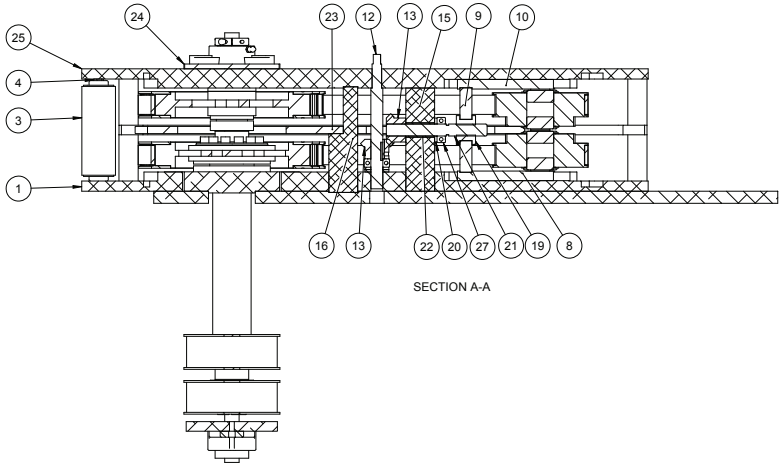


SECTION A-A

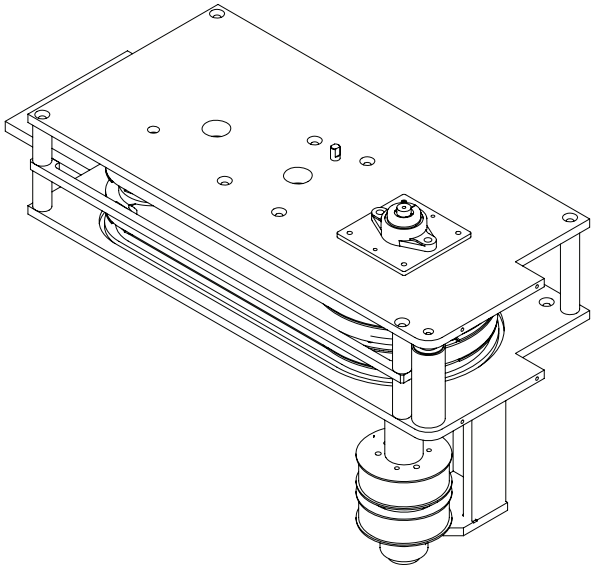

| BILL OF MATERIALS | | | |
|---|---|---|---|
| ITEM | QTY | NUMBER | DESCRIPTION |
| 1 | 1 | 364844 | PLT, TRACK, COLLATOR, LOWER, RH |
| 2 | 2 | 195481 | SPACER |
| 3 | 1 | 101929-027 | RLR, IDLER, CRS, 1.750, BRG, FAFNIR NI PLT |
| 4 | 1 | 195482 | HEX, SHAFT, 5-5/16" LG |
| 5 | 1 | 195480 | SHAFT, IDLER |
| 6 | 2 | 195479 | WASHER |
| 7 | 4 | 364836 | PULLEY, IDLER |
| 8 | 1 | 195473 | PLT, BOTTOM, TENSIONER |
| 9 | 1 | 195474 | PLT |
| 10 | 1 | 195472 | PLT, TOP, TENSIONER |
| 11 | 1 | 195476 | SHAFT |
| 12 | 1 | 364842 | SHAFT, ADJ., GEAR |
| 13 | 2 | 370629 | GEAR, MITER, 18T, 20 DEG, 3/16 KEY, 5/8 BORE |
| 14 | 1 | 364833 | PLT, BASE, COLLATOR, RH |
| 15 | 1 | 364834 | BLOCK, RH |
| 16 | 1 | 195485 | CLUTCH BRACKET |
| 17 | 2 | 195483 | PLT |
| 18 | 1 | 195484 | PLT, 3 BOLT BRG MNT |
| 19 | 1 | 195477 | NUT |
| 20 | 3 | 800439 | WSHR, OILITE, 0.628 X 1.250 X 1/8 THK |
| 21 | 1 | 364843 | SCREW, TENSIONER |
| 22 | 1 | 817259 | BUSH, OILITE, 0.627 X 0.753 X 1-1/2 LG |
| 23 | 1 | 364835 | PLT, RETAINER |
| 24 | 1 | 221045 | PLT, BRG, MTG |
| 25 | 1 | 364837 | PLT, TRACK, COLLATOR, UPPER, RH |
| 26 | 2 | 855398 | BELT, TIMING, H PITCH, 1" W, 60" LG, 120 TEETH, ENDLESS, STEEL CORDS |
| 27 | 2 | 800596 | COLLAR, SHAFT, CLAMP, 2-PIECE, 5/8 |
| 28 | 2 | 195481-001 | SPACER, 2.407 LG |
| 29 | 2 | 286735 | SPACER |
| 30 | 1 | 371653 | GUIDE, MIDDLE |

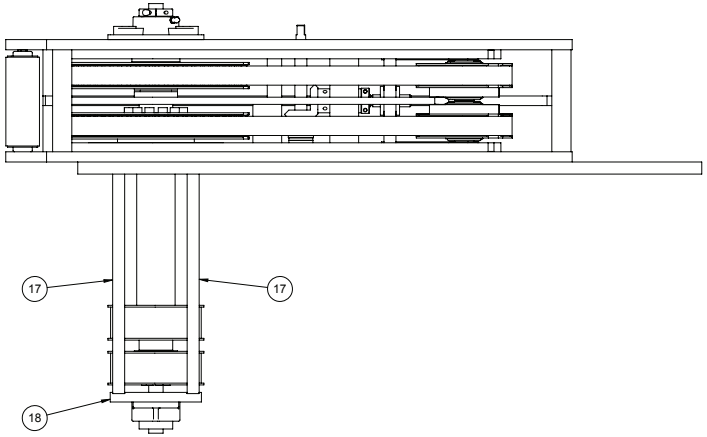


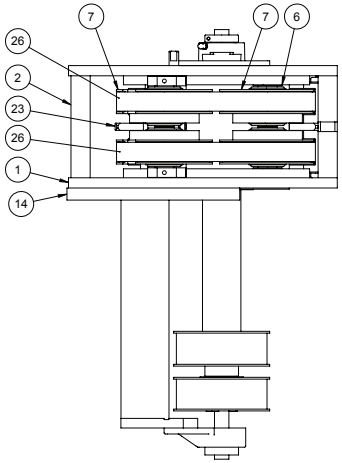


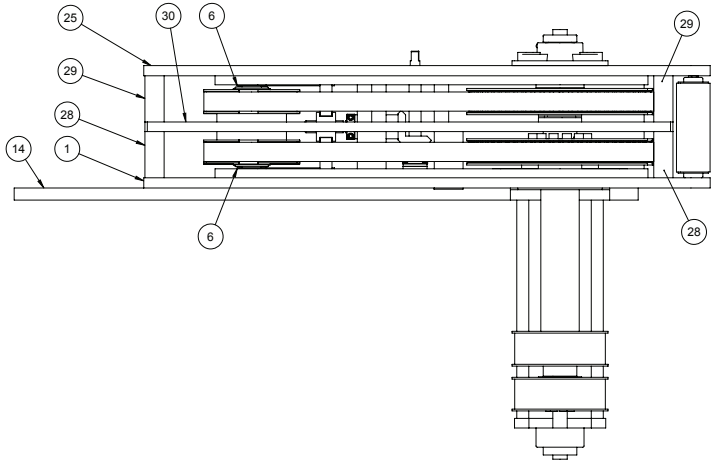


| REV | DATE | BY | NOTE |
|---|---|---|---|
| REVISIONS | | | |

NOTES
- INTERPRET PER ASME Y14.5M-1994.
- DIMENSIONS ARE IN INCHES [mm].
- DIMENSIONS IN PARENTHESES FOR REFERENCE ONLY.
- BREAK SHARP EDGES AND CORNERS.
- PROPRIETARY NOTICE: THIS INFORMATION IS THE PROPERTY OF ARPAC LLC AND SHALL NOT BE USED FOR ANY PURPOSE OTHER THAN THAT FOR WHICH IT WAS OBTAINED.
- CREATED IN SOLIDWORKS 2013.

CREATED IN SOLIDWORKS 2013

ARPAC A DURAVANT COMPANY
9555 W. Irving Park Rd.
Schiller Park, IL 60176
www.arpac.com

| MODEL | | |
|---|---|---|
| | FILE \ CONFIG | 384781\384781 |
| | SIMILAR TO | -- |
| | DATE CREATED | Wednesday, May 3, 2017 12:46:35 PM |
| | DATE UPDATED | Thursday, April 22, 2021 10:17:19 AM |
| | UPDATED BY | sarcher |
| DRAFT | DATE CREATED | Thursday, May 4, 2017 2:58:16 PM |
| | DATE UPDATED | Wednesday, April 21, 2021 6:10:18 PM |
| | UPDATED BY | sarcher |

| SIZE | SCALE | MATERIAL | DESCRIPTION |
|---|---|---|---|
| C | 1:5 | SEE BILL OF MATERIALS | ASSY, TRACK, COLLATOR, 60" LG BELT, RH |
| 3RD ANGLE | UNITS | | |
| | INCH | | |
| TOLERANCES | | FINISH | NUMBER |
| X/X: ±1/32<br>X.XX: ±.015<br>X.XXX: ±.005<br>ANGLES: ±1° | | NONE | 384781 |

"C:\nVenia_Vault\Designs_CORRUGATED\TS-2300\220562-1-1\384781.slddrw" accessed Thursday, April 22, 2021.

SHEET 1 OF 1

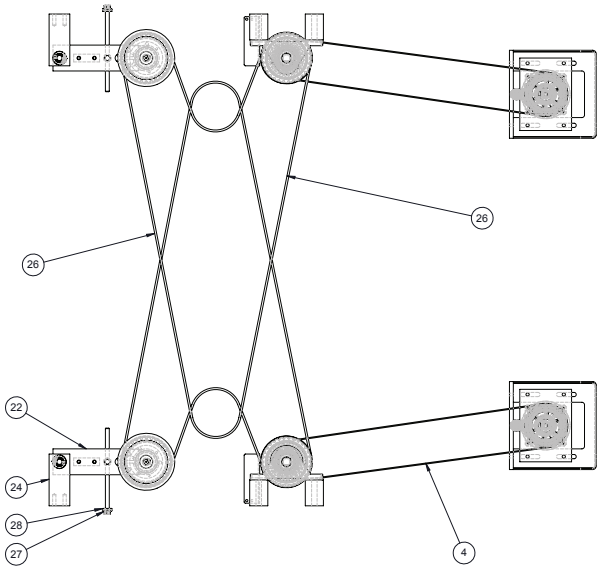


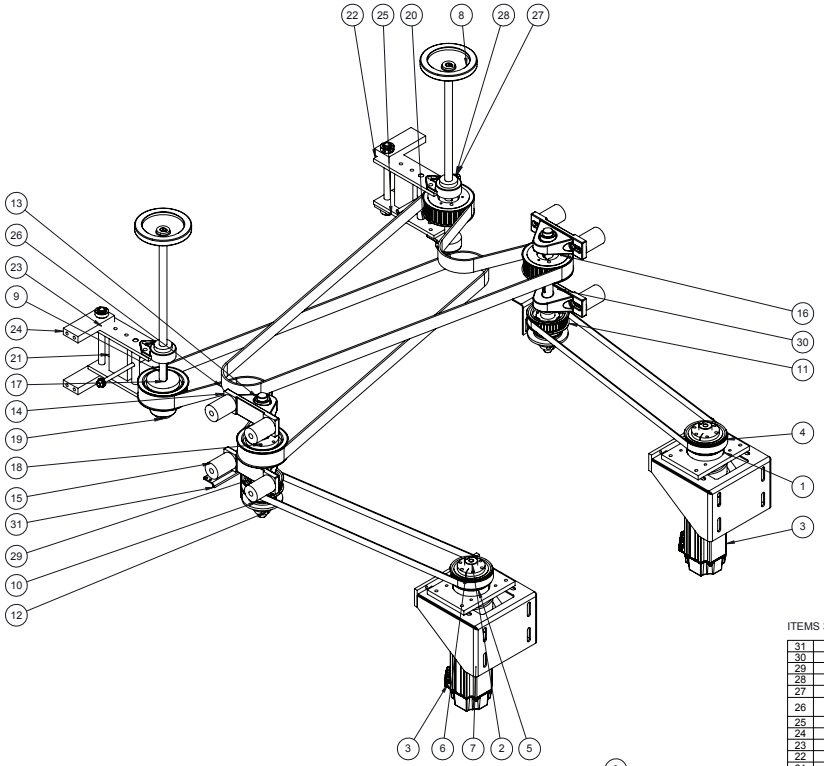


NOTE: REPLACE EXISTING SPRINGS ON ITEM-10
TORQUE LIMITER WITH ITEM-32 SPRINGS.

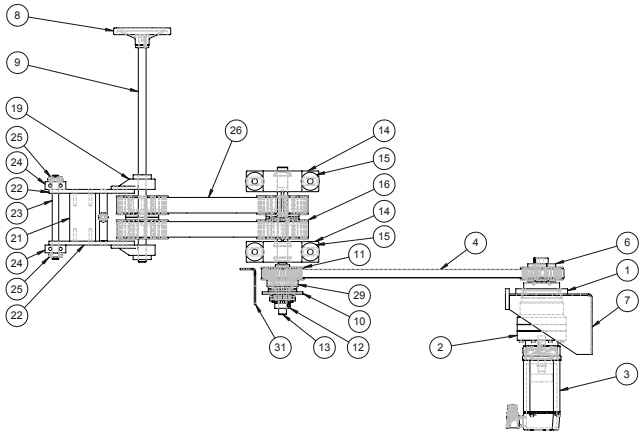


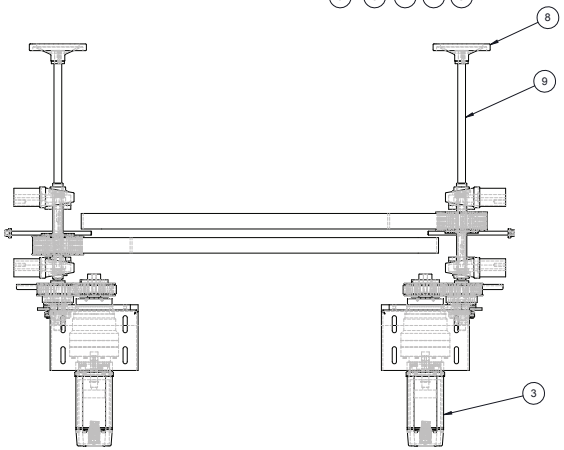


ITEMS 32 AND 33 ARE NOT SHOWN

| ITM | QTY | PART NUM | DESCRIPTION |
|---|---|---|---|
| 31 | 1 | 221945-002 | BKT, SENSOR, DRIVE, COLLACTOR, LH |
| 30 | 1 | 221945-001 | BKT, SENSOR, DRIVE, COLLACTOR, RH |
| 29 | 2 | 332977 | ADAPTOR, PULLEY, LIMITER, TORQUE |
| 28 | 2 | 817233 | SPHERCAL WASHER |
| 27 | 2 | 134133 | WLDMT, SCREW, ADJ, TAKE-UP, COLLATOR, 8"LG |
| 26 | 3 | 809505 | BELT, TIMING, 1/2 P, 1-1/2 W, 110 LG, TWIN POWER (DOUBLE SIDED) |
| 25 | 4 | 800578 | COLLAR, SHAFT, CLAMP, 1-PIECE, 5/8 |
| 24 | 4 | 193193 | BKT |
| 23 | 2 | 193192 | SHAFT, ADJ, SWIVEL |
| 22 | 4 | 193191 | PLT, ADJ, SWIVEL |
| 21 | 2 | 193190 | SPACER, CMTL60 |
| 20 | 2 | 193189 | NUT, ADJ SWIVEL |
| 19 | 4 | 802770 | BRG, FLG, 3/4 ID, 3-BOLT, SINGLE-LOCK, STANDARD DUTY |
| 18 | 2 | 807660 | BUSH, TAPER, QD, 1 BORE X 1-13/16 LG |
| 17 | 2 | 800662 | BUSH, TAPER, QD, 3/4 BORE X 1-13/16 LG |
| 16 | 4 | 801251 | PULLEY, TIMING, 30T, 1/2 P, 1-1/2 W, SD BUSHING REQUIRED |
| 15 | 8 | 193187 | SPACER, PILLOW BLOCK |
| 14 | 4 | 817229 | BRG, PILLOW BLK, 1 ID, SINGLE-LOCK STANDARD-DUTY |
| 13 | 2 | 193186 | SHAFT |
| 12 | 2 | 807096 | COLLAR, SHAFT, CLAMP, 1-PIECE, 3/4, EXTREME CL8867 |
| 11 | 2 | 332978 | PULLEY, P38-8M-20, MOD |
| 10 | 2 | 819392 | LIMITER, TORQUE, MULT. RESET OPTI SIZE1 3/4" BORE, EXTENDED HUB |
| 9 | 2 | 286730 | SHAFT, HAND WHEEL |
| 8 | 2 | 809078 | HD.WH, SAFETY, W/CPLG, 5/8 B., 5 1/2OD |
| 7 | 2 | 294732 | WLDMNT, BKT, MTG, SERVO MOTOR |
| 6 | 2 | 822280 | BUSH, TAPER, QD, 32MM BORE X 1-1/4 LG |
| 5 | 2 | 817226 | PULLEY, TIMING, 38T, 8MM P, 20MM W, SH BUSHING REQUIRED |
| 4 | 2 | 807792 | BELT, TIMING, 8MM P, 20MM W, 1600MM LG, 200T |
| 3 | 2 | 849316 | MOTOR, SERVO, 37 IN-LB, 4750 RPM 460VAC, KINETIX 5500 CONTROLLER |
| 2 | 2 | 870571 | GEARBOX, IN-LINE, PLANETARY, 20:1, VPL-B1003F-PJ12AA |
| 1 | 2 | 221881 | MNT, GEAR REDUCER |

BILL OF MATERIALS

ARPAC
9511 WEST RIVER ST.
SCHILLER PARK, IL 60176

UNLESS OTHERWISE SPECIFIED:
ALL DIMENSIONAL TOLERANCES:
FRACTIONS: ± 1/64
TWO (2) DECIMALS: ± 0.010
THREE (3) DECIMALS: ± 0.005
ANGLES: ± 0.5°

| DRAWN: 4/22/2021 | BY: SRA | SCALE: 1:6 | SIZE: D |
|---|---|---|---|
| | FILENAME: 384783 | | |

DESCRIPTION:
ASSY, DRIVE, COLLATOR, 460VAC, VPL SERVO

DRAWING NUMBER:
384783

ARPAC C SIZE FORMAT R5.1

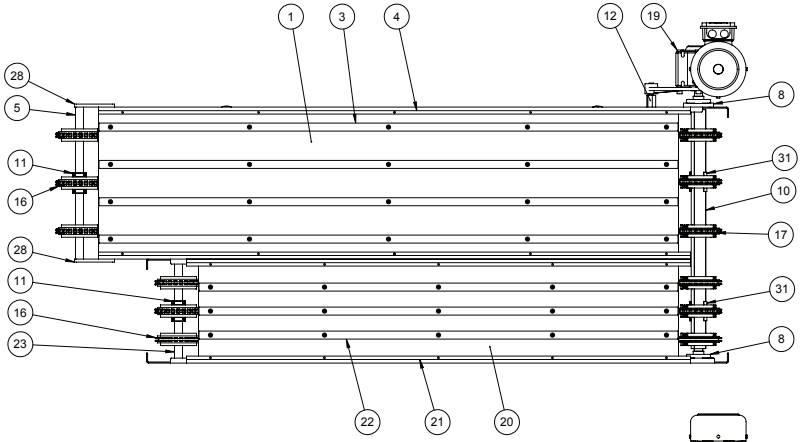


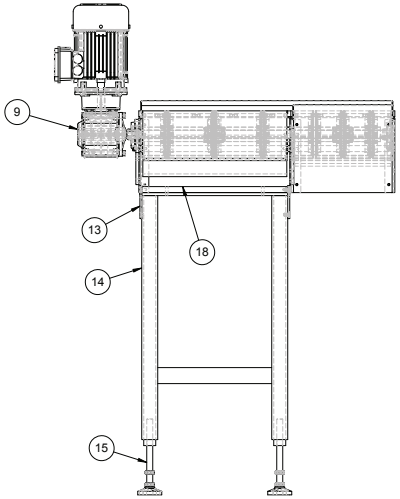


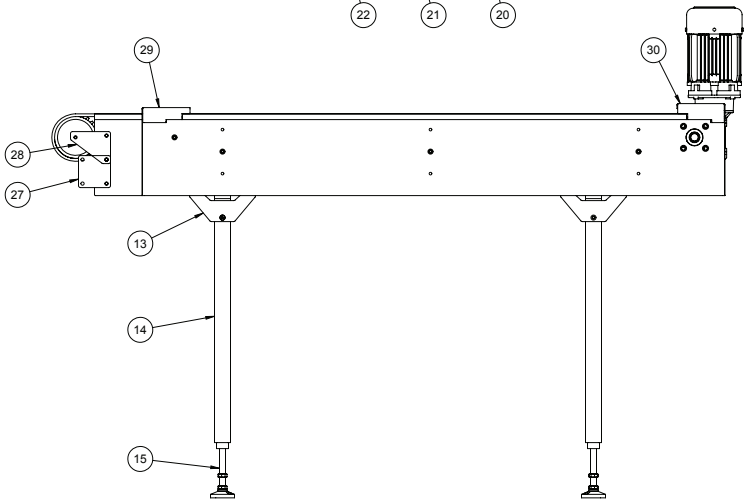


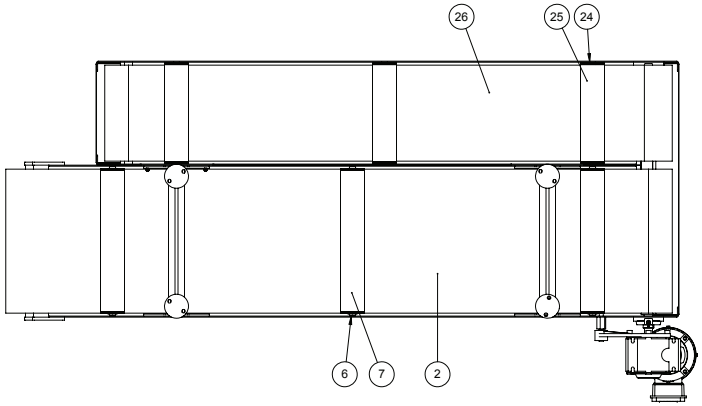


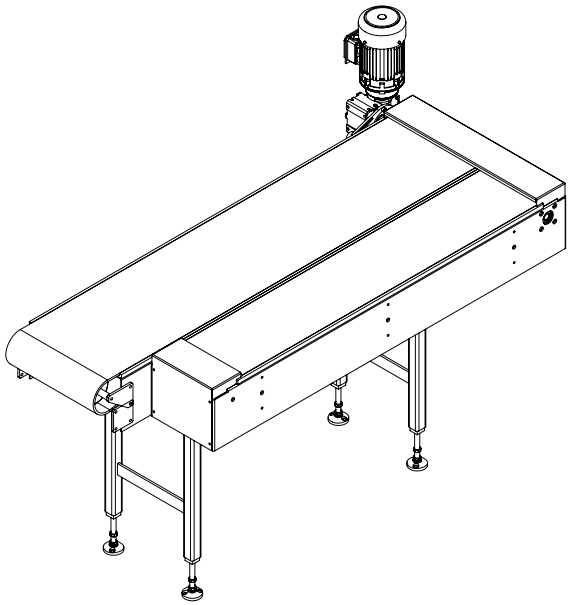

| BILL OF MATERIALS | | | |
|---|---|---|---|
| ITEM | QTY | NUMBER | DESCRIPTION |
| 1 | 1 | 385024 | FRAME, CONV, TRANSFER, SIDE, 18 WD BELT |
| 2 | 1 | 872419 | BELT, MODULAR, MAT TOP, ACETAL, HP8505-18IN |
| 3 | 4 | 385029 | RAIL, GUIDE, BELT |
| 4 | 2 | 385028 | RAIL, GUIDE, SIDE, BELT |
| 5 | 1 | 309571-016 | SHAFT, TAIL, 19.00 LG |
| 6 | 3 | 310689-017 | SHAFT, IDLER, CSINK |
| 7 | 3 | 300373-012 | RLR, DEFLECTION, L = 18.20 |
| 8 | 2 | 839632 | BRG, FLG, 1 ID, 4-BOLT |
| 9 | 1 | 311656 | WASHER, RETAINER |
| 10 | 1 | 385020 | SHAFT, DRIVE, CONV, TRANSFER, SIDE |
| 11 | 4 | 800568 | COLLAR, SHAFT, CLAMP, 2-PIECE, 1 ID x 1 3/4 OD |
| 12 | 1 | 315027 | PIN, LOCKING, DRIVE |
| 13 | 4 | 315016 | PLT, STIFF |
| 14 | 2 | 374168-001 | WLDMT, SUPPORT, CONV |
| 15 | 4 | 841410 | LEVELER, ARTICULATING, 7400 # CAP, 3/4-10 STEM, 9.5 HIGH, CRS 3" BASE, 2 C'SUNK LAG HOLES, HEAVY LIP ON BASE |
| 16 | 6 | 872417 | SPKT, NS8500-24T_1IN_I_PA |
| 17 | 6 | 872418 | SPKT, NS8500-24T_1-1/2IN_S_PA |
| 18 | 2 | 315005-009 | CROSSBAR, INTERMEDIATE, CSINK |
| 19 | 1 | 872585 | GEARMOTOR, FLEXBLOC, Ø1" HOLLOW SHAFT, 25:1, 70 RPM, 1.5 HP, 230/460 VAC, W/ TORQUE ARM |
| 20 | 1 | 385008 | FRAME, CONV, BRIDGE, 12 WD BELT |
| 21 | 2 | 385021 | RAIL, GUIDE, SIDE, BELT |
| 22 | 3 | 385019 | RAIL, GUIDE, BELT |
| 23 | 1 | 309571-015 | SHAFT, TAIL, 12.73 LG |
| 24 | 3 | 310689-018 | SHAFT, IDLER, CSINK, 12.73 LG |
| 25 | 3 | 300373-019 | RLR, DEFLECTION, A =12.66 |
| 26 | 1 | 872606 | BELT, MODULAR, MAT TOP, ACETAL, HP8505-12IN |
| 27 | 2 | 385027 | PLT, CONNECT, CONV |
| 28 | 2 | 385030 | PLT, MTG, SHAFT, SPROCKET |
| 29 | 1 | 385031 | GUARD, BELT, CONV |
| 30 | 1 | 385032 | GUARD, BELT, CONV, TRANSFER |
| 31 | 4 | 800970 | RETAINER RING, SELF SET, 1-1/2" SQ SHAFT SS C-TYPE W/SETSCREW |

| REV | DATE | BY | NOTE |
|---|---|---|---|
| REVISIONS | | | |

NOTES
- INTERPRET PER ASME Y14.5M-1994.
- DIMENSIONS ARE IN INCHES [mm].
- DIMENSIONS IN PARENTHESES FOR REFERENCE ONLY.
- BREAK SHARP EDGES AND CORNERS.
- PROPRIETARY NOTICE: THIS INFORMATION IS THE PROPERTY OF ARPAC LLC AND SHALL NOT BE USED FOR ANY PURPOSE OTHER THAN THAT FOR WHICH IT WAS OBTAINED.
- CREATED IN SOLIDWORKS 2018.

CREATED IN SOLIDWORKS 2018

ARPAC A DURAVANT COMPANY 9555 W. Irving Park Rd. Schiller Park, IL 60176 www.arpac.com

| MODEL | | |
|---|---|---|
| | FILE \ CONFIG | 385007\385007 |
| | SIMILAR TO | -- |
| | DATE CREATED | Tuesday, July 7, 2020 1:14:35 PM |
| | DATE UPDATED | Friday, October 22, 2021 10:44:18 AM |
| | UPDATED BY | sarcher |
| DRAFT | DATE CREATED | Wednesday, May 5, 2021 5:13:15 PM |
| | DATE UPDATED | Friday, October 22, 2021 10:44:30 AM |
| | UPDATED BY | sarcher |

| SIZE | SCALE | MATERIAL | DESCRIPTION |
|---|---|---|---|
| C | 1:12 | SEE BILL OF MATERIALS | ASSY, CONV, TRANSFER, SIDE |
| 3RD ANGLE | UNITS | | |
| | INCH | | |
| TOLERANCES | | FINISH | NUMBER |
| X/X: ±1/32<br>X.XX: ±.015<br>X.XXX: ±.005<br>ANGLES: ±1° | | NONE | 385007 |

"C:\n\Venia_Vault\Designs_CORRUGATED\TS-2300\220562-1-1\385007.slddrw" accessed Friday, October 22, 2021.

SHEET 1 OF 1

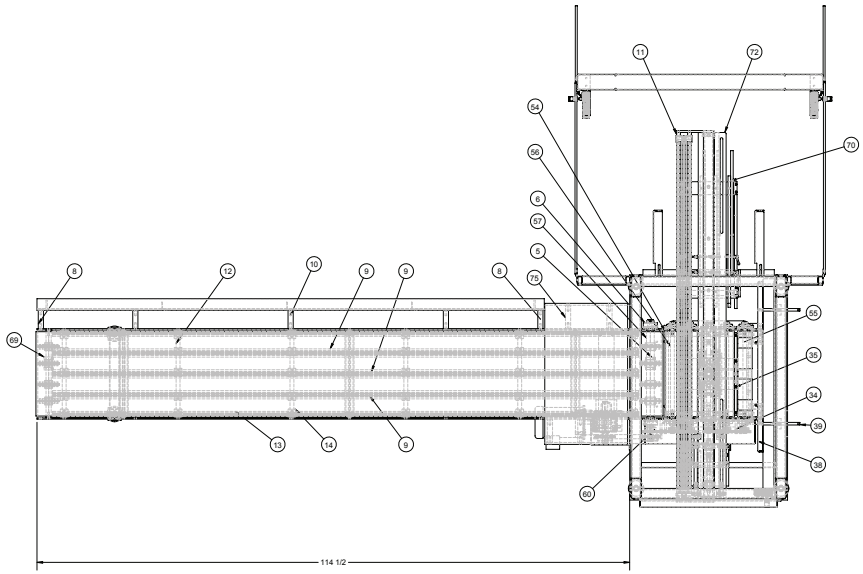


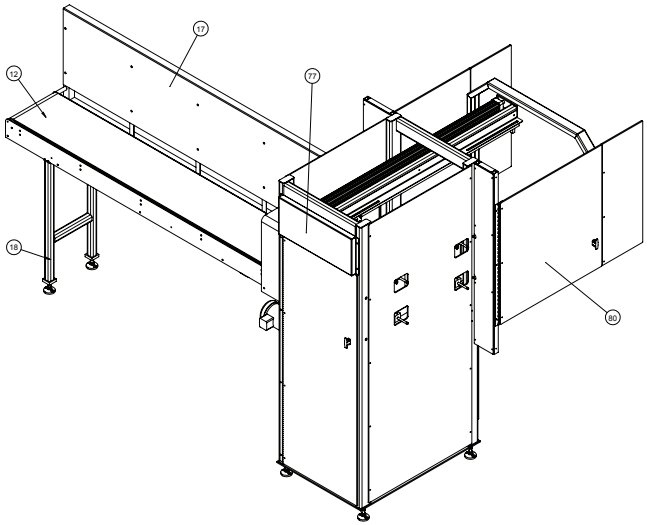

SCALE 1 : 16

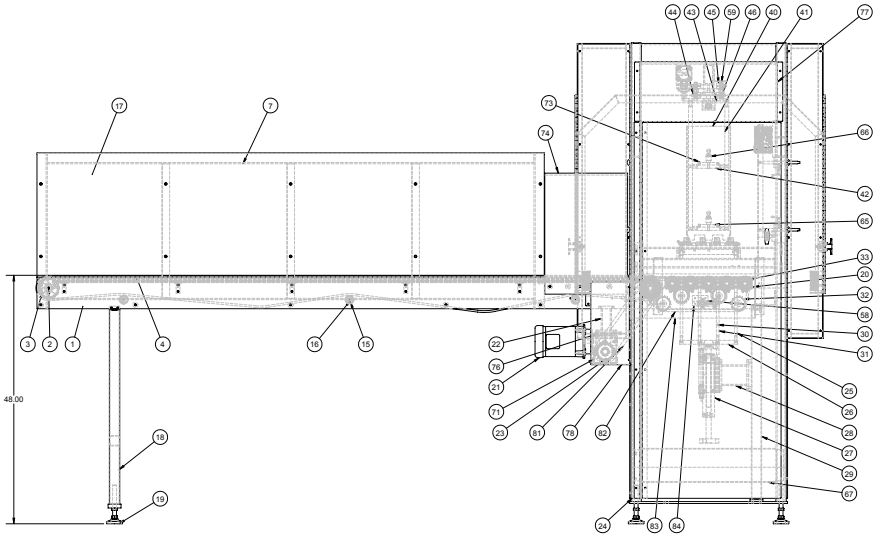


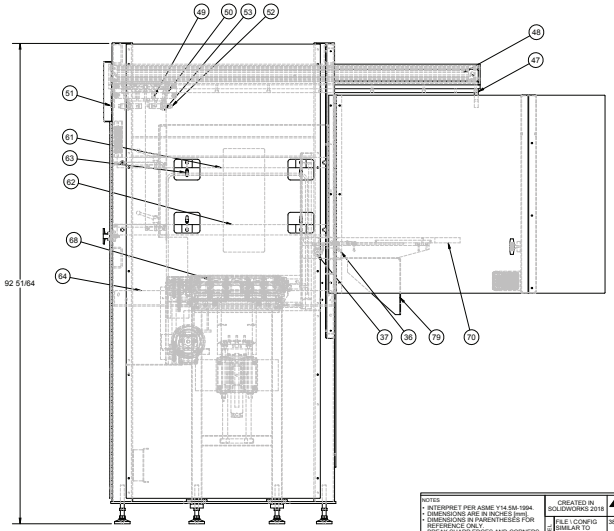


NOTES:
ITEM 85 NOT SHOWN.
PUSHER STROKE IS 57".
MAXIMUM WIDTH TRAY BLANK IS 25".

BILL OF MATERIALS

| ITEM | QTY | NUMBER | DESCRIPTION |
|---|---|---|---|
| 1 | 2 | 328568 | PLT, SIDE |
| 2 | 1 | 286499 | SHAFT, IDL |
| 3 | 4 | 807935 | SPKT, 12T, 1 DIA BORE, 4.1 PD, ACETAL |
| 4 | 1 | 810084 | BELT,FLUSH GRID,FLAT FRICTION TOP,EVERY 4TH ROW, WHITE RUBR ON WHITE PP, 18.3"W |
| 5 | 2 | 800970 | RETAINER RING, SELF SET, 1-1/2" SQ SHAFT SS C-TYPE WISETSCREW |
| 6 | 2 | 816401 | BRG, FLG, 1 ID, 3-BOLT, STANDARD DUTY |
| 7 | 1 | 191132 | WLDMT, MOUNT, TRAY GUIDE, ROTATING |
| 8 | 4 | 369909 | SPACER, 1 OD, 3-5/8 LG, 5/16-18 TAPPED |
| 9 | 3 | 801296-002 | RAIL, GUIDE, TEE, 1.60 W, 10' LG, SS |
| 10 | 3 | 187977-006 | SPACER, MOUNT, TRAY GUIDE, 3-5/8" LG |
| 11 | 4 | 276485 | SPACER |
| 12 | 6 | 138846 | XMBR, MTG, SIDE PLT |
| 13 | 2 | 801292-003 | RAIL, GUIDE, TEE, 1.0 X 0.38 L-SHAPE, 10' SS |
| 14 | 30 | 801359 | CLAMP, RAIL, SINGLE, 1.5 LG, SS, ROUND HOLE |
| 15 | 3 | 101929-020 | RLR, IDLER, CRS, 1.750, BRG, FAFNIR,NI PLT |
| 16 | 3 | 101811-116 | SHAFT, RLR, HEX, 7/16, TAPPED 1/4-20,17 L, FRAME WIDTH, SEAL WIDTH |
| 17 | 1 | 221898 | PLT, SIDE |
| 18 | 1 | 187987-004 | LEG, WLDMT, 48" ELEV |
| 19 | 6 | 827618 | LEVELER, ARTICULATING, 7400 # CAP, 3/4-10 STEM, 7.5 HIGH CRS, 3" BASE, 2 C'SUNK LAG HOLES, HEAVY LIP ON BASE |
| 20 | 10 | 827120 | BRG, FLG, 3/4 ID, 2 BOLT, 2.81 MTG HOLES |
| 21 | 1 | 803215 | MOTOR, 3/4 HP, 230/460V, 60HZ, 3PH, 56C FRM, TEFC, 1725 RPM |
| 22 | 1 | 296169 | WLDMNT, MTG, GEARBOX |
| 23 | 2 | 101791 | SPKT, 50B18, MOD, 1.000 BORE |
| 24 | 1 | 385411 | WLDMT, FRAME, MAG, EXTENDED, WIDE TRAY, 48" ELEV |
| 25 | 2 | 187992-001 | PLATE, SIDE, LINEAR, TRANSFER |
| 26 | 1 | 187993 | PLATE, BOTTOM, LINEAR, TRANSFER |
| 27 | 1 | 825197 | CYL, AIR, 50MM BORE,200MM STROKE, GUIDED W/SHOCK ABS. |
| 28 | 1 | 187994 | CYL, MOUNT, WLDMT |
| 29 | 1 | 286590-001 | WLDMT, LEG 48" ELEV |
| 30 | 2 | 187996-001 | PLATE, SIDE, LINEAR, TRANSFER |
| 31 | 4 | 187997-001 | GUIDE, LINEAR TRANSFER |
| 32 | 4 | 800906 | SPKT, 40B61TH, IDL, 5/8 ID, EXTREME SK9445 |
| 33 | 5 | 101752 | SPKT, 40B12, MOD, .750 BORE |
| 34 | 4 | 130484 | SPACER, IDLER, BRG |
| 35 | 4 | 187998 | INSERT, PLATE, SIDE |
| 36 | 1 | 187999 | MOUNT, BRIDGE, WLDMT |
| 37 | 1 | 188000 | PIVOT, BRIDGE, WLDMT |
| 38 | 1 | 370907-001 | PANEL, GUIDE, BLANK, TRAY |
| 39 | 4 | 294785 | ROD, ADJ, 1/2 DIA X 9L |
| 40 | 1 | 282811 | PUSHER |
| 41 | 2 | 282815 | PLT, PUSHER |
| 42 | 2 | 282816 | PLT, PUSHER, ADJ |
| 43 | 1 | 282810 | SADDLE |
| 44 | 8 | 808105 | FOLLOWER, CAM, 1 OD, 7/16-20 STUD, W/HEX HOLE, ECCENTRIC STUD |
| 45 | 4 | 809737 | FOLLOWER, CAM, 1 OD, 5/8-18 STUD, W/HEX HOLE, SEALED |
| 46 | 2 | 136406 | SIDE PLATE |
| 47 | 1 | 189450 | GUIDE |
| 48 | 1 | 816488 | CYL, AIR, 50 MM BORE, 67 STROKE, RODLESS SERIES 2000, FLOATING MNT |
| 49 | 2 | 276482 | SPACER |
| 50 | 4 | 802878 | FOLLOWER, CAM, 1 OD, 5/16 ID, SEALED |
| 51 | 2 | 136408 | STOP, SHOCK ABSORBER |
| 52 | 2 | 816625-001 | SHOCK, 1-12 THRD, 1 STROKE, NICKLE PLATE W/2 LOCK NUT,BUTTON,(PM-100-(F-1B SHOCK) |
| 53 | 2 | 136409 | MOUNT, SHOCK ABSORBER |
| 54 | 4 | 282796 | ROLLER,DISCHARGE |
| 55 | 1 | 282797 | ROLLER, DISCHARGE, GROOVED |
| 56 | 5 | 328567 | SHF, IDLER, DISCHARGE |
| 57 | 1 | 282828 | SHF, DRIVE, 1 1/2 SQ. |
| 58 | 2 | 189453 | MNT, CAM FOLLOWER, ECC. |
| 59 | 4 | 136397 | PIVOT, SIDE PLATE |
| 60 | 1 | 101789 | SPKT, 40B14, MOD, 1.000 BORE |
| 61 | 1 | 369904 | WLDMT, ADJ, PLATE, STOP |
| 62 | 1 | 369904-001 | WLDMT, ADJ, PLATE, STOP |
| 63 | 4 | 810224 | HDL, ADJ, SS, 1.57 LG 1/4-20 X 1.18 STUD |
| 64 | 1 | 369903 | BKT, SUPPORT, CONV |
| 65 | 2 | 282812 | PLT, PUSHER ADJ. |
| 66 | 2 | 808030 | HDL, ADJ, ZINC, 3-3/4 LG 3/8-16 X 1.18 STUD |
| 67 | 1 | 282818 | BKT, MTG, AIR PREPARATION |
| 68 | 4 | 806043 | SPKT, 12T, 1-1/2 SQ BORE, 4.1 PD, ACETAL |
| 69 | 2 | 800600 | COLLAR, SHAFT, CLAMP, 1-PIECE |
| 70 | 1 | 332605 | ASSY, BRIDGE, MAG, EXT |
| 71 | 1 | 846461 | GEARBOX, WORM, 50:1, 56C FACE, QUILL TYPE, DOUBLE SHAFT |
| 72 | 1 | 294833 | BKT, MTG, PROX |
| 73 | 2 | 294784 | SCALE, 8 LG |
| 74 | 1 | 369911-001 | GUARD, ACCESS, REACH |
| 75 | 4 | 187977-007 | SPACER, MOUNT, TRAY GUIDE, 4-1/2" LG |
| 76 | 1 | 306853 | PLT, MTG, GEARMOTOR |
| 77 | 1 | 308263 | GUARD, MAG, EXT, UPPER |
| 78 | 1 | 308264 | GUARD, CHAIN, MAG, EXT |
| 79 | 2 | 384787 | BKT, CONNECT, MAG, EXT |
| 80 | 1 | 385414 | ASSY, COVERS, LEXAN, MAG, EXTENDED |
| 81 | 4 | 800468 | CHAIN, RLR, #50 |
| 82 | 6 | 800462 | CHAIN, RLR, #40, RLR RVT |
| 83 | 1 | 371177-001 | COVER, GUARD, CHAIN |
| 84 | 1 | 371178 | BKT, MTG, COVER, GUARD, CHAIN |

| REV | DATE | BY | NOTE |
|---|---|---|---|
| | | | REVISIONS |

NOTES
- INTERPRET PER ASME Y14.5M-1994.
- DIMENSIONS ARE IN INCHES [mm].
- DIMENSIONS IN PARENTHESES FOR REFERENCE ONLY.
- BREAK SHARP EDGES AND CORNERS.
- PROPRIETARY NOTICE: THIS INFORMATION IS THE PROPERTY OF ARPAC LLC AND SHALL NOT BE USED FOR ANY PURPOSE OTHER THAN THAT FOR WHICH IT WAS OBTAINED.
- CREATED IN SOLIDWORKS 2018.

CREATED IN SOLIDWORKS 2018

| | | |
|---|---|---|
| 1 | FILE \ CONFIG SIMILAR TO | 385410\385411 |
| 2 | DATE CREATED | Thursday, February 7, 2013 2:54:58 PM |
| 3 | DATE UPDATED | Monday, May 10, 2021 4:09:47 PM |
| | UPDATED BY | sandhar |
| 4 | DATE CREATED | Tuesday, April 6, 2021 8:02:09 AM |
| 5 | DATE UPDATED | Monday, May 10, 2021 2:38:44 PM |
| 5 | UPDATED BY | sandhar |

ARPAC
POLYMER
A DRIVEMASTER COMPANY
8800 W. Irving Park Rd.
Schiller Park, IL 60176
www.arpac.com

| SIZE | SCALE | MATERIAL | DESCRIPTION |
|---|---|---|---|
| D | 1:12 | SEE BILL OF MATERIALS | ASSY, MAG, EXTENDED, WIDE TRAY, 48" ELEV, LH |
| 3RD ANGLE | UNITS | | |
| | INCH | | |
| TOLERANCES: XX: ±1/32 X.XX: ±.015 X.XXX: ±.005 ANGLES: ±1° | FINISH: NONE | | NUMBER: 385410 |

SHEET 1 OF 1

"C:\mVenia_Vault\Designs_CORRUGATED\75-2309220562-1-1385410.slddrw" accessed Monday, May 10, 2021.

ARPAC C SIZE FORMAT R5.1

BILL OF MATERIALS

| ITEM | QTY | NUMBER | DESCRIPTION |
|---|---|---|---|
| 1 | 3 | 802653 | LATCH, VISE-ACTION |
| 2 | 3 | 221651 | BRK, STOP, LATCH |
| 3 | 2 | 369934 | HINGE, DOOR, 38.25 LG |
| 4 | 2 | 369933 | DOOR, LEXAN, SIDE |
| 5 | 1 | 383413 | HINGE, DOOR, 72.625 LG |
| 6 | 1 | 383414 | DOOR, LEXAN, 26.88 X 72.625 |
| 7 | 1 | 369935 | COVER, SIDE, DOOR, LEXAN, NARROW |
| 8 | 1 | 369936 | COVER, SIDE, DOOR, LEXAN, WIDE |
| 9 | 1 | 285333 | FRAME, MTG, GUARD, HOPPER |
| 10 | 2 | 298636 | BKT, MTG, SWITCH, DOOR |
| 11 | 1 | 240594 | WLDMT, MTG, DOOR, NARROW |
| 12 | 1 | 328583 | WLDMT, MTG, DOOR, WIDE |
| 13 | 1 | 298730 | BKT, MTG, SWITCH, DOOR |
| 14 | 2 | 370549 | PANEL, GUARD, LEXAN, MAGAZINE |
| 15 | 1 | 371143-001 | PANEL, GUARD, LEXAN |
| 16 | 1 | 385415 | COVER, LEXAN, W/CUTOUTS, MAG, EXT |
| 17 | 1 | 385416 | COVER, LEXAN, BOTTOM |
| 18 | 1 | 369938 | COVER, LEXAN, TOP |

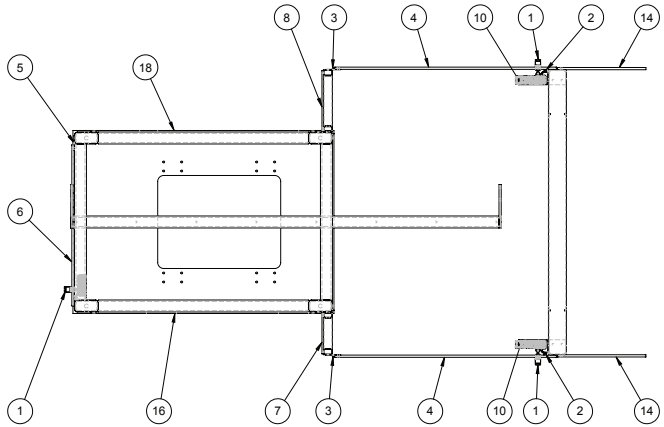


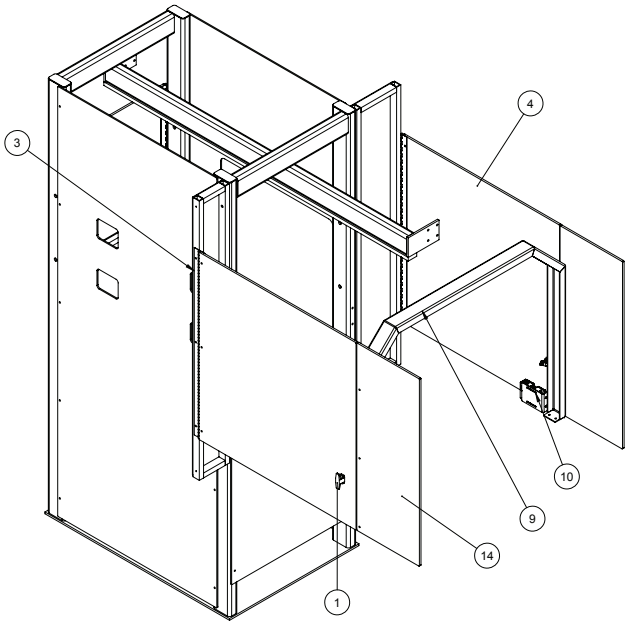


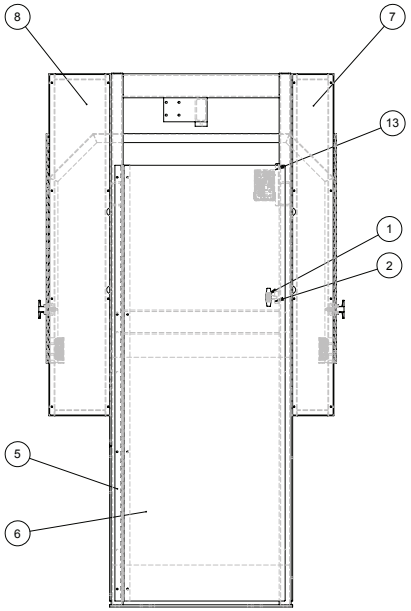


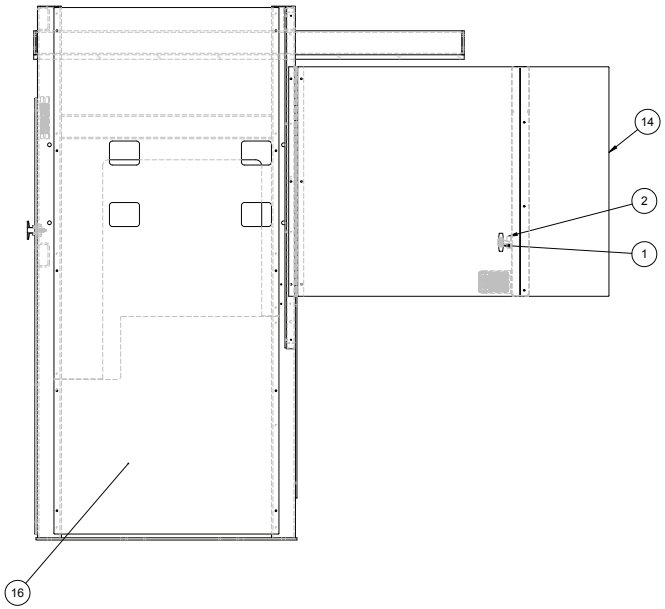


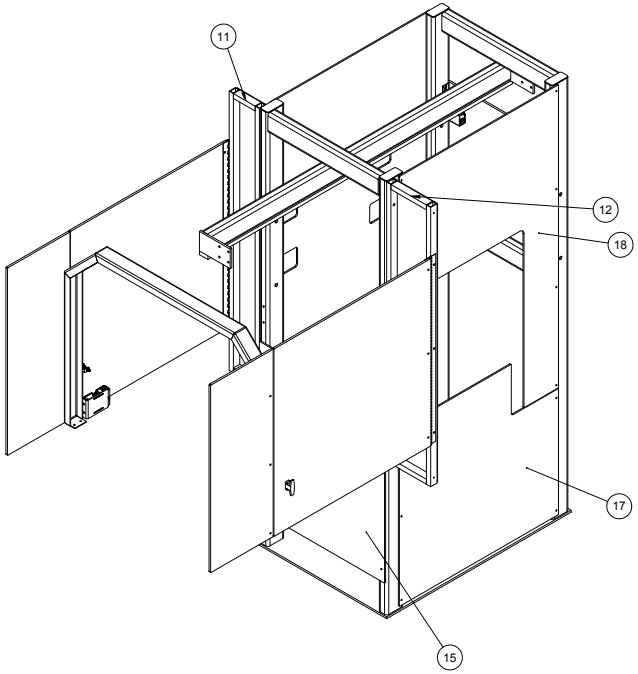


| REV | DATE | BY | NOTE |
|---|---|---|---|
| REVISIONS | | | |

NOTES
- INTERPRET PER ASME Y14.5M-1994.
- DIMENSIONS ARE IN INCHES [mm].
- DIMENSIONS IN PARENTHESES FOR REFERENCE ONLY.
- BREAK SHARP EDGES AND CORNERS.
- PROPRIETARY NOTICE: THIS INFORMATION IS THE PROPERTY OF ARPAC LLC AND SHALL NOT BE USED FOR ANY PURPOSE OTHER THAN THAT FOR WHICH IT WAS OBTAINED.
- CREATED IN SOLIDWORKS 2018.

CREATED IN SOLIDWORKS 2018

ARPAC A DURAVANT COMPANY
9555 W. Irving Park Rd.
Schiller Park, IL 60176
www.arpac.com

| MODEL | |
|---|---|
| FILE \ CONFIG | 385414\385414 |
| SIMILAR TO | 383412 |
| DATE CREATED | Monday, February 17, 2014 3:37:53 PM |
| DATE UPDATED | Monday, May 10, 2021 3:10:11 PM |
| UPDATED BY | sarcher |

| DRAFT | |
|---|---|
| DATE CREATED | Monday, April 5, 2021 2:29:57 PM |
| DATE UPDATED | Monday, May 10, 2021 11:43:19 AM |
| UPDATED BY | sarcher |

| SIZE | SCALE |
|---|---|
| C | 1:16 |

3RD ANGLE | UNITS: INCH

TOLERANCES
X/X: ±1/32
X.XX: ±.015
X.XXX: ±.005
ANGLES: ±1°

MATERIAL: SEE BILL OF MATERIALS

FINISH: NONE

DESCRIPTION: ASSY, COVERS, LEXAN, MAG, EXTENDED

NUMBER: 385414

NVENIA B SIZE FORMAT R1

| BILL OF MATERIALS | | | |
|---|---|---|---|
| ITEM | QTY | NUMBER | DESCRIPTION |
| 1 | 2 | 390688 | PLT, SUPPORT, BAR, TRANSFER |
| 2 | 1 | 390689 | BAR, TRANSFER, PRODUCT |
| 3 | 2 | 390690 | PLT, SHIM |

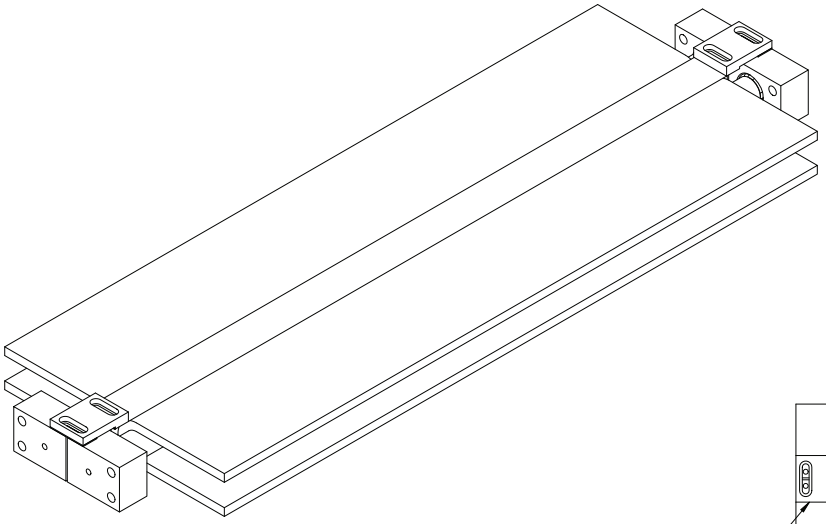

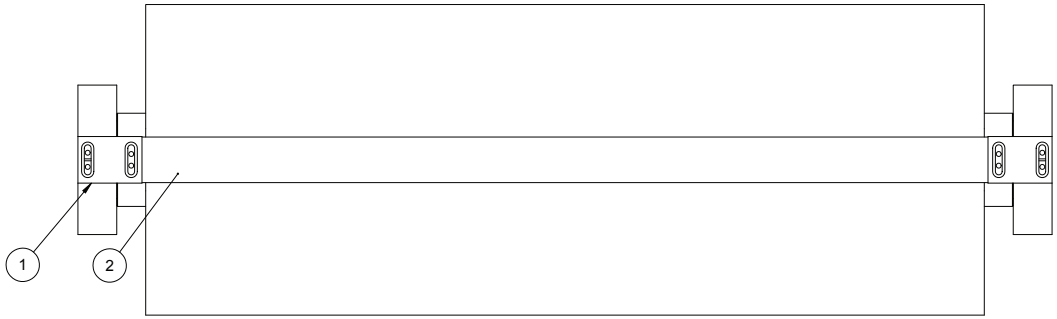


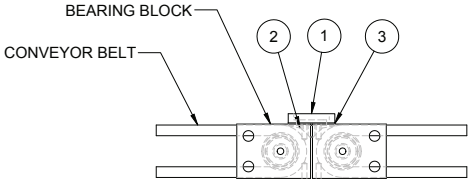


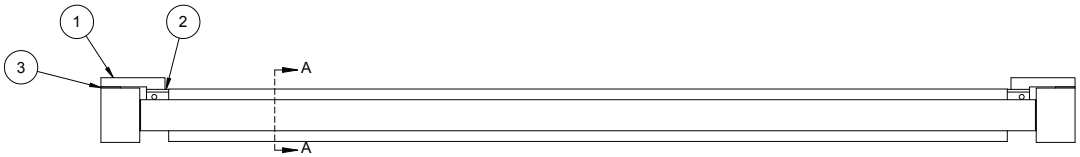


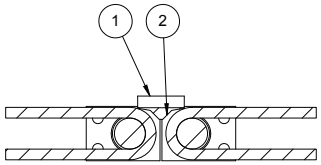


SECTION A-A

| REV | DATE | BY | NOTE |
|---|---|---|---|
| REVISIONS | | | |

NOTES
- INTERPRET PER ASME Y14.5-2018.
- DIMENSIONS ARE IN INCHES [mm].
- DIMENSIONS IN PARENTHESES FOR REFERENCE ONLY.
- BREAK SHARP EDGES AND CORNERS.
- PROPRIETARY NOTICE: THIS INFORMATION IS THE PROPERTY OF NVENIA LLC AND SHALL NOT BE USED FOR ANY PURPOSE OTHER THAN THAT FOR WHICH IT WAS OBTAINED.
- CREATED IN SOLIDWORKS.

CREATED IN SOLIDWORKS

NVENIA A DURAVANT COMPANY 750 N Wood Dale Rd Wood Dale, IL 60191 nvenia.com

| | | |
|---|---|---|
| MODEL | FILE \ CONFIG | 390696\Default |
| | SIMILAR TO | -- |
| | DATE CREATED | Wednesday, December 23, 2020 2:55:00 PM |
| | DATE UPDATED | Thursday, October 21, 2021 4:57:29 PM |
| | UPDATED BY | sarcher |
| DRAFT | DATE CREATED | Thursday, October 21, 2021 4:57:37 PM |
| | DATE UPDATED | Thursday, October 21, 2021 5:10:01 PM |
| | UPDATED BY | sarcher |

| SIZE | SCALE |
|---|---|
| B | 1:4 |
| 3RD ANGLE | UNITS |
| | INCH |

TOLERANCES
X/X: ±1/32
X.XX: ±.015
X.XXX: ±.005
ANGLES: ±1°

MATERIAL: SEE BILL OF MATERIALS

FINISH: NONE

DESCRIPTION: ASSY, PLT, TRANSFER, CONV

NUMBER: 390696

"C:\nVenia_Vault\Designs_CORRUGATED\TS-2300\17766\390696.slddrw" accessed Thursday, October 21, 2021.

SHEET 1 OF 1

IN9001

| REV. | ZONE | ECN | DESCRIPTION | DATE | BY |
|---|---|---|---|---|---|

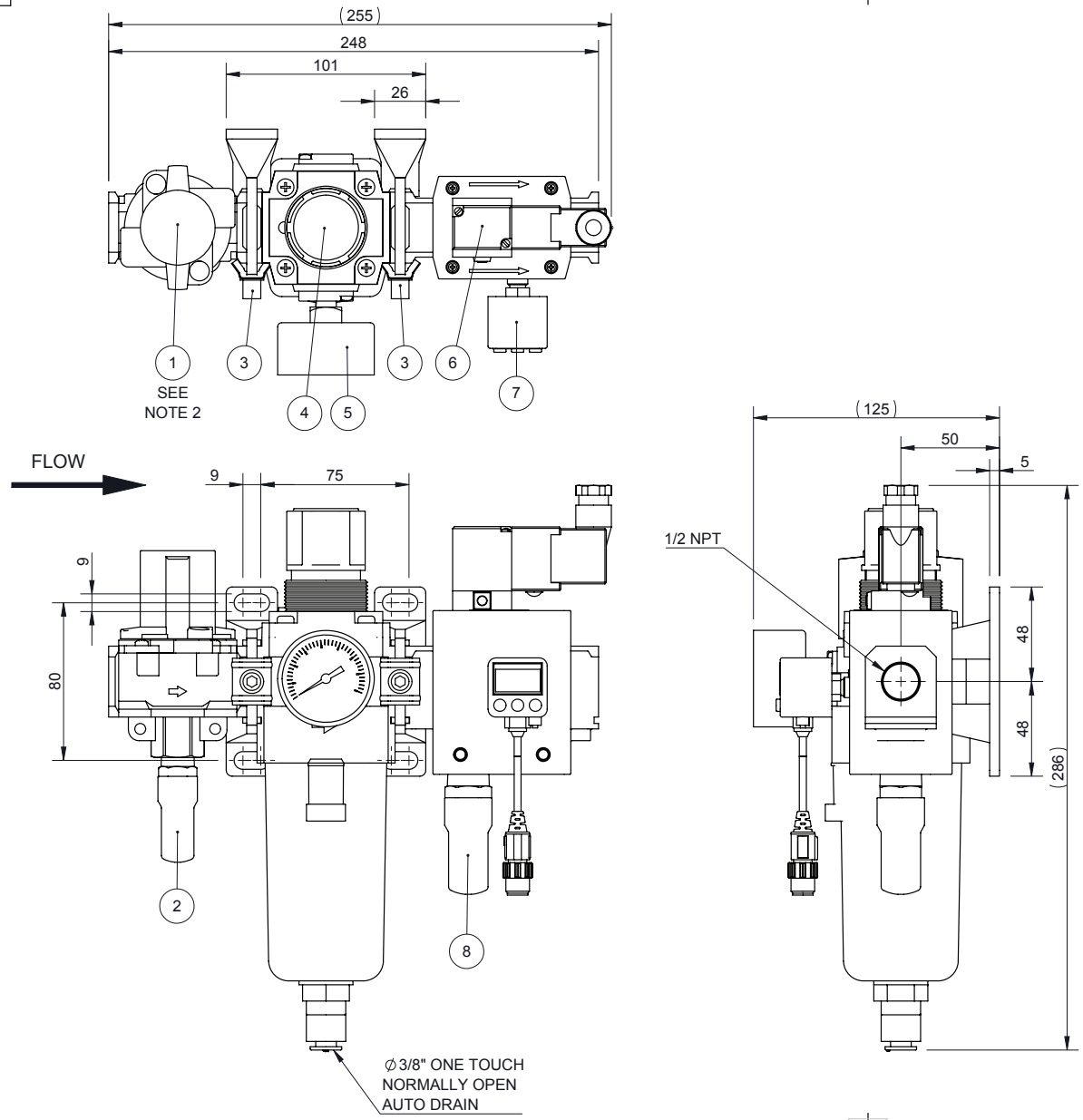


**NOTES:**

1) ALL DIMENSIONS ARE FOR REFERENCE ONLY..
2) EXHAUST ALL DOWNSTREAM PRESSURE BEFORE TURNING THE VHS HAND VALVE TO THE CLOSED POSITION.
3) GAUGE AND PRESSURE SWITCH NOT INSTALLED, TO PREVENT DAMAGE DURING SHIPPING.

**STANDARD SPECIFICATIONS:**

PROOF PRESSURE: 1.5 MPa (218 psi)
OPERATING PRESSURE RANGE: 0.2~1.0 MPa (29~145 psi)
FLUID: AIR
AMBIENT AND FLUID TEMPERATURE: 0~50°C (32~122°F) WITH NO FREEZING
NOMINAL FILTRATION RATING: 5 µm
VOLTAGE: 24 VDC

PLEASE SEE WWW.SMCWORLD.COM FOR SPECIFIC PRODUCT INFORMATION

| ITEM NO. | PART NUMBER | DESCRIPTION | QTY. |
|---|---|---|---|
| 8 | AN40-N04 | SILENCER | 1 |
| 7 | ISE40A-N01-Y-P-X531 | PRESSURE SWITCH | 1 |
| 6 | AV4000-N04-5DZ-X260 | SOFT-START VALVE | 1 |
| 5 | K50-MP1.0-N01MS | GAUGE, PRESSURE | 1 |
| 4 | AW40-N04D-Z-B | FILTER/REGULATOR | 1 |
| 3 | Y400T-A | INTERFACE | 2 |
| 2 | AN30-N03 | SILENCER WITH 3/8" THREAD | 1 |
| 1 | VHS40-N04B-Z | VALVE, 3 PORT LOCK OUT | 1 |

UNITS: mm
SCALE: FREE
DRAWN BY: DICK A. SHULER
DATE: 11/20/2018
APPROVED BY: REFER TO EDM SYSTEM
PRINTED DOCUMENTS ARE UNCONTROLLED
REFER TO EDM SYSTEM FOR CONTROLLED DOCUMENT
CAD FILE: AC40-DUW02467
SIZE: B

SMC. SMC Corporation of America

THIS DRAWING CONTAINS CONFIDENTIAL INFORMATION PROPRIETARY TO SMC CORPORATION OF AMERICA. IT MUST NOT BE REPRODUCED OR DISCLOSED TO OTHERS OR USED IN ANY OTHER WAY, IN PART OR IN WHOLE, EXCEPT AS AUTHORIZED IN WRITING BY SMC CORPORATION OF AMERICA.

DESCRIPTION: AIR COMBINATION
DRAWING/PART No.: AC40-DUW02467
SHEET 1 OF 1
REVISION: 0

REFERENCE NUMBER: US132912

# B

# Electrical Schematics

## B.1. Electrical Schematics

This section contains the electrical schematics for this machine.

© ARPAC, A Duravant Company

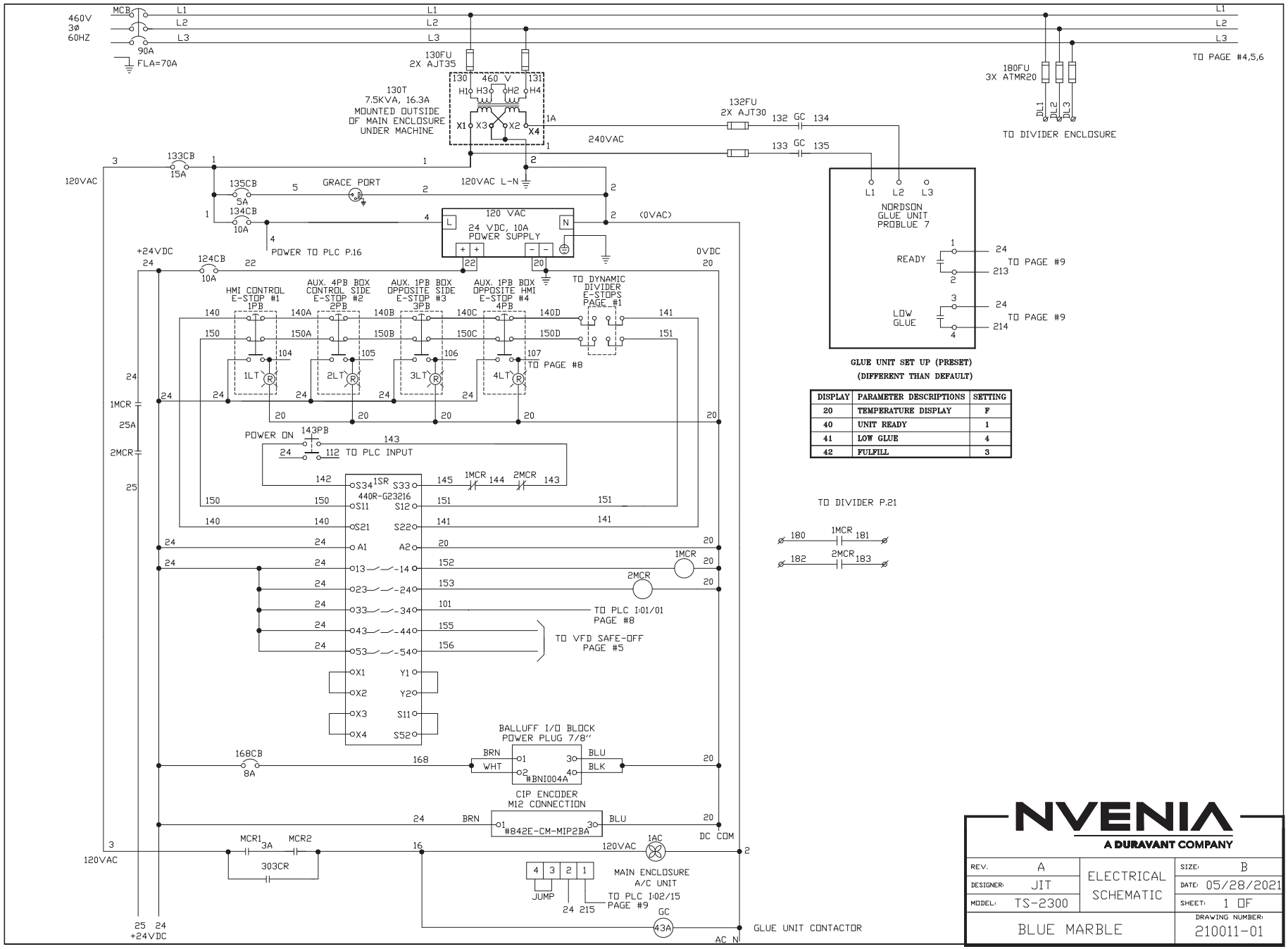


**GLUE UNIT SET UP (PRESET)**
**(DIFFERENT THAN DEFAULT)**

| DISPLAY | PARAMETER DESCRIPTIONS | SETTING |
|---|---|---|
| 20 | TEMPERATURE DISPLAY | F |
| 40 | UNIT READY | 1 |
| 41 | LOW GLUE | 4 |
| 42 | FULFILL | 3 |

NVENIA
A DURAVANT COMPANY

| | | | |
|---|---|---|---|
| REV. A | ELECTRICAL SCHEMATIC | SIZE: B | |
| DESIGNER: JIT | | DATE: 05/28/2021 | |
| MODEL: TS-2300 | | SHEET: 1 OF | |
| BLUE MARBLE | | DRAWING NUMBER: 210011-01 | |

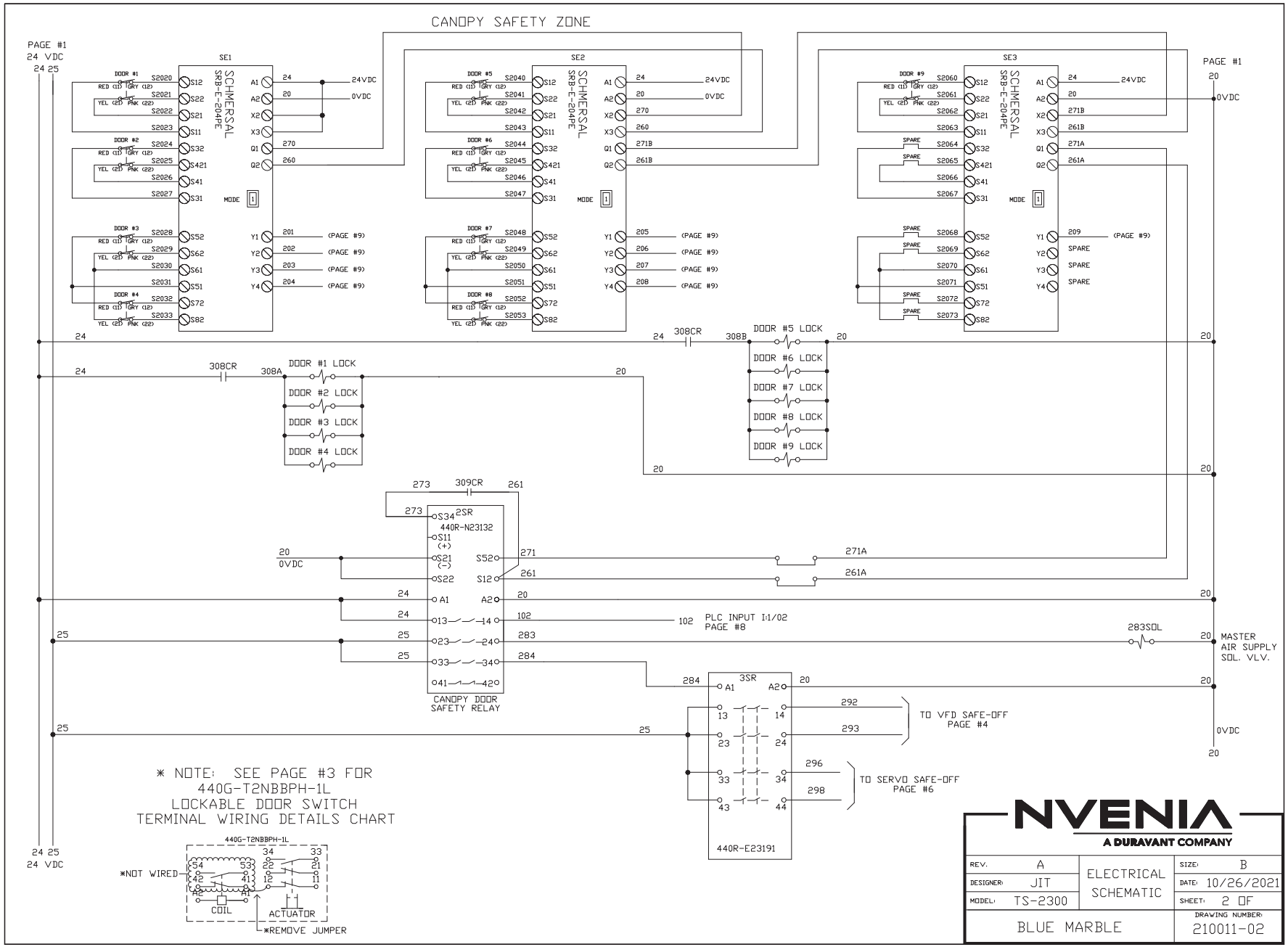
CANOPY SAFETY ZONE
PAGE #1
24 VDC
SE1
SE2
SE3
SCHMERSAL
SRB-E-204PE
24VDC
0VDC
(PAGE #9)
SPARE
DOOR #1 LOCK
DOOR #2 LOCK
DOOR #3 LOCK
DOOR #4 LOCK
DOOR #5 LOCK
DOOR #6 LOCK
DOOR #7 LOCK
DOOR #8 LOCK
DOOR #9 LOCK
308CR
309CR
2SR
440R-N23132
CANOPY DOOR
SAFETY RELAY
PLC INPUT I:1/02
PAGE #8
283SOL
MASTER
AIR SUPPLY
SOL. VLV.
3SR
440R-E23191
TO VFD SAFE-OFF
PAGE #4
TO SERVO SAFE-OFF
PAGE #6
* NOTE: SEE PAGE #3 FOR
440G-T2NBBPH-1L
LOCKABLE DOOR SWITCH
TERMINAL WIRING DETAILS CHART
440G-T2NBBPH-1L
*NOT WIRED
COIL
ACTUATOR
*REMOVE JUMPER
NVENIA
A DURAVANT COMPANY
REV. A
DESIGNER: JIT
MODEL: TS-2300
ELECTRICAL
SCHEMATIC
SIZE: B
DATE: 10/26/2021
SHEET: 2 OF
BLUE MARBLE
DRAWING NUMBER:
210011-02

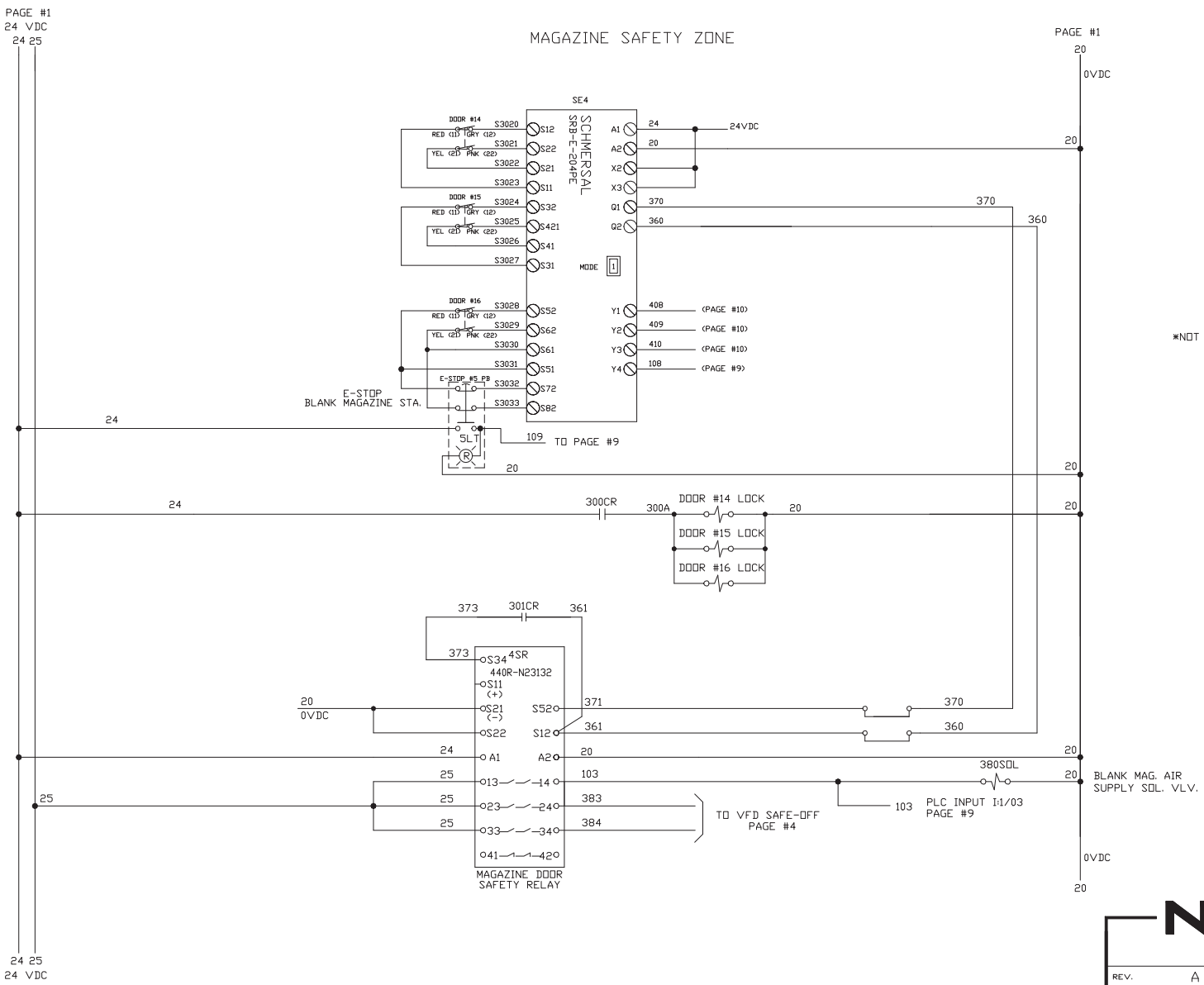


## 440G-T2NBBPH-1L
## LOCKABLE DOOR SWITCH
## TERMINAL WIRING DETAILS

| TERMINAL | COLOR | DESCRIPTION |
|---|---|---|
| A1 | GRN | SOLENOID POWER |
| A2 | BLUE | 0VDC |
| 11 | RED | SAFETY A |
| 12 | RED/BLK | SAFETY A |
| 21 | RED/WHT | SAFETY B |
| 22 | RED/YEL | SAFETY B |
| 33 | BRN | +24 VDC |
| 34 | WHT | AUX. CONTACT (TO PLC) |
| 41 | N/A | *NOT CONNECTED |
| 42 | N/A | *NOT CONNECTED |
| 53 | N/A | *NOT CONNECTED |
| 54 | N/A | *NOT CONNECTED |

**REMOVE JUMPER BETWEEN 12 AND 41

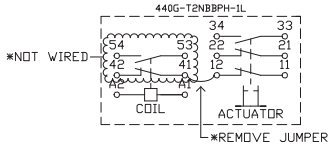


NVENIA
A DURAVANT COMPANY

| | | | |
|---|---|---|---|
| REV. A | ELECTRICAL SCHEMATIC | SIZE: B | |
| DESIGNER: JIT | | DATE: 05/26/2021 | |
| MODEL: TS-2300 | | SHEET: 3 OF | |
| BLUE MARBLE | | DRAWING NUMBER: 210011-03 | |

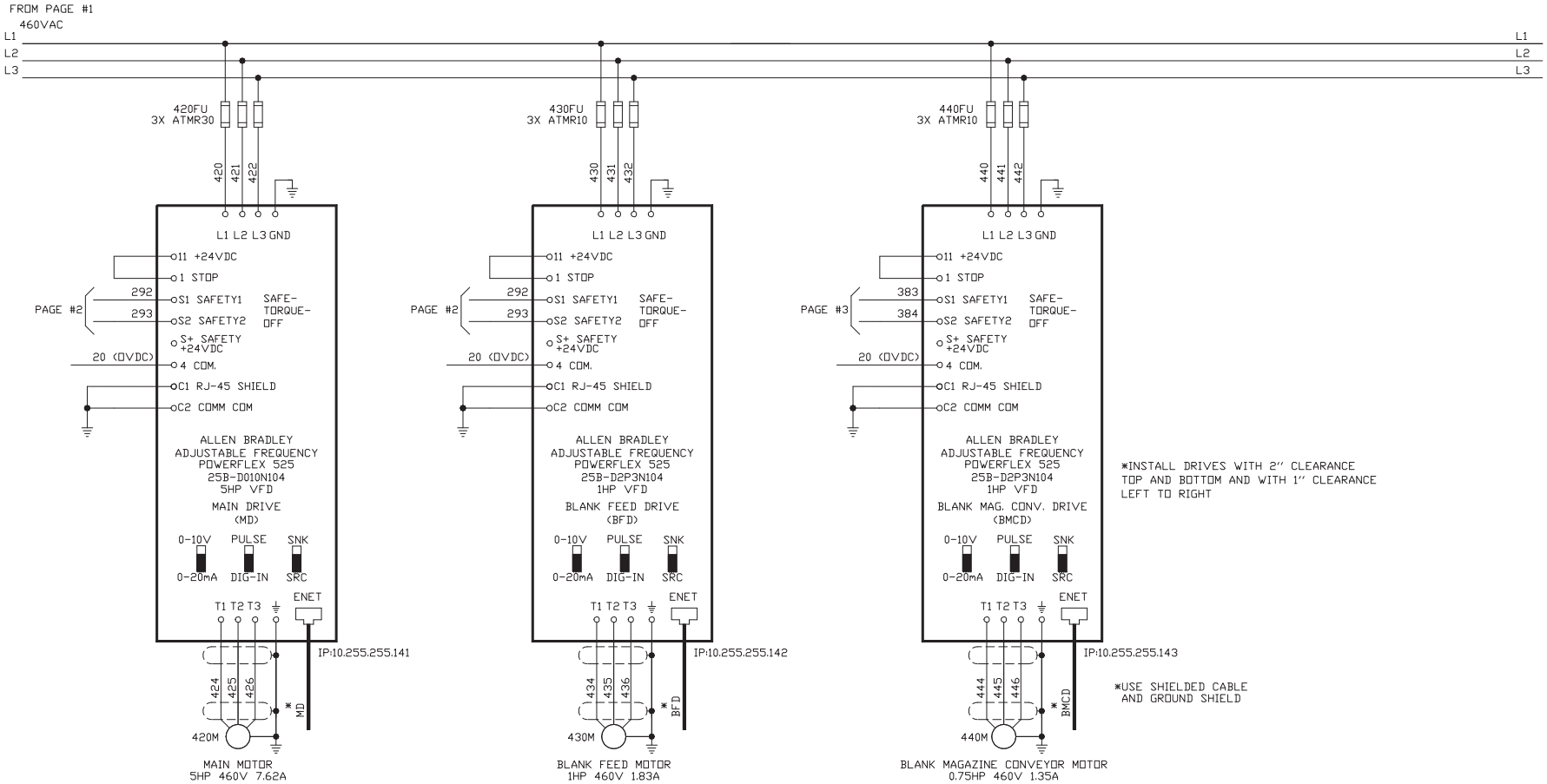


USE VFD CABLE PROVIDED. THIS IS RATED FOR TRAYS. ALSO, USE SHIELD CONNECTORS AT MOTOR SIDE.

*** SET TO THE MAXIMUM ALLOWABLE MOTOR CURRENT**

**POWERFLEX 525 MAIN DRIVE SET UP (PRESET)**
**(DIFFERENT THAN DEFAULT)**

| DISPLAY | PARAMETER DESCRIPTIONS | SETTING |
|---|---|---|
| P031 | RATED VOLTAGE | 460 |
| P033 | MOTOR OL CURRENT | * |
| P046 | START SOURCE | 5 ETH |
| P047 | SPEED REFERENCE | 15 ETH |
| P041 | ACCELERATION TIME | 1 |
| P042 | ACCELERATION TIME | 0.5 |
| P044 | MAXIMUM FREQUENCY | 60 |
| A543 | START AT POWER UP | 1.0 |

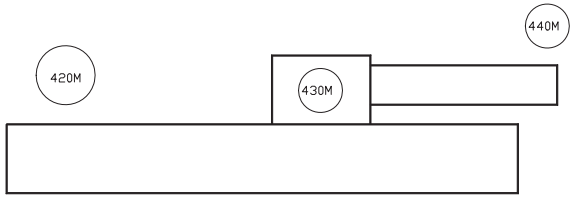


NVENIA
A DURAVANT COMPANY

| | | | |
|---|---|---|---|
| REV. A | ELECTRICAL SCHEMATIC | SIZE: B | |
| DESIGNER: JIT | | DATE: 05/26/2021 | |
| MODEL: TS-2300 | | SHEET: 4 OF | |
| BLUE MARBLE | | DRAWING NUMBER: 210011-04 | |

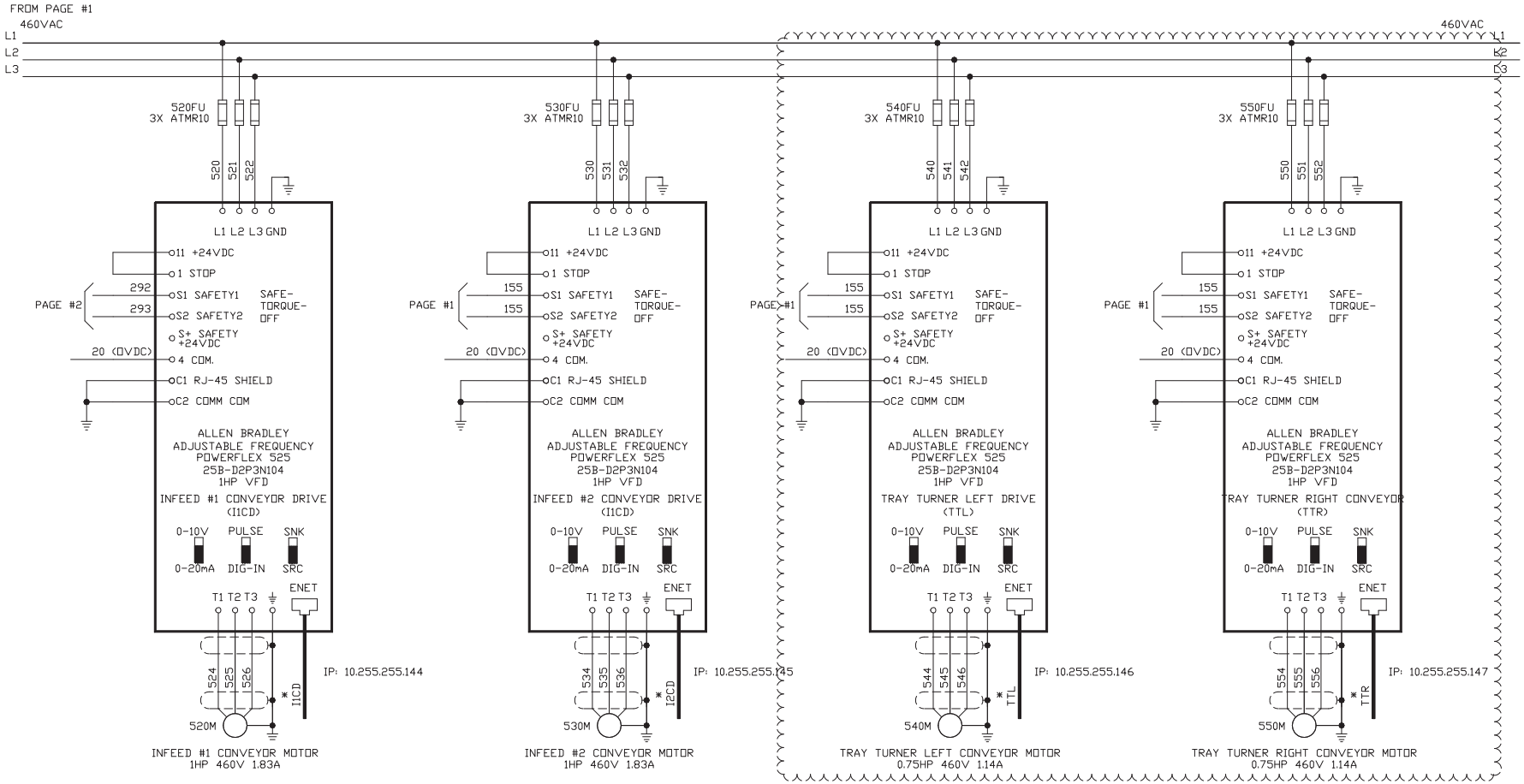


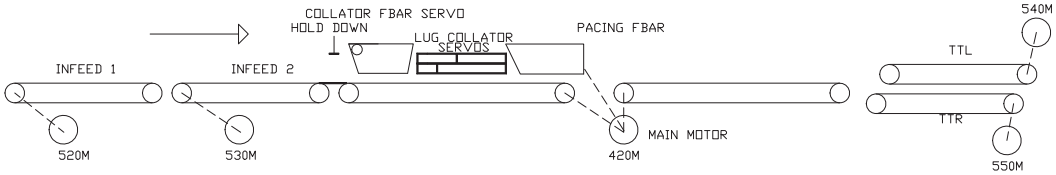


**POWERFLEX 525 MAIN DRIVE SET UP (PRESET)**
**(DIFFERENT THAN DEFAULT)**

| DISPLAY | PARAMETER DESCRIPTIONS | SETTING |
|---|---|---|
| P031 | RATED VOLTAGE | 460 |
| P033 | MOTOR OL CURRENT | * |
| P046 | START SOURCE | 5 ETH |
| P047 | SPEED REFERENCE | 15 ETH |
| P041 | ACCELERATION TIME | 1 |
| P042 | ACCELERATION TIME | 0.5 |
| P044 | MAXIMUM FREQUENCY | 90 |
| A543 | START AT POWER UP | 1.0 |

* SET TO THE MAXIMUM ALLOWABLE MOTOR CURRENT

NVENIA
A DURAVANT COMPANY

| | | | |
|---|---|---|---|
| REV. A | ELECTRICAL SCHEMATIC | SIZE: B | |
| DESIGNER: JIT | | DATE: 11/01/2021 | |
| MODEL: TS-2300 | | SHEET: 5 OF | |
| BLUE MARBLE | | DRAWING NUMBER: 210011-05 | |

460V
3ø
60HZ

L1
L2
L3

680FU
3X KTK-R-20

681 682 683

GRN

AC POWER BUS TO CLLD

DC POWER AND CONTROL POWER
BUS CONNECTOR JUMPS
TO EACH SERVO

DC POWER AND CONTROL POWER
BUS CONNECTOR JUMPS
TO EACH SERVO

+24VDC
24

UPPER LUG HOME
691PRX

BRN
N.O.
BLK 691
BLU 20

20

HOME 1 INPUT
I/O COMMON
I/O SHIELD TERMINATION

1 BN
4 BKR
3 BU
PNP
+
-

DC POWER
CONNECTOR

(GROUND CHASIS
TO GROUND)

L1 L2 L3 GRN

1 2
CONTROL POWER

DIGITAL INPUTS
1 IN1
2 COM
3 IN2
4 SHLD

SHUNT POWER
1
2

ALLEN BRADLEY
KINETIX 5500
2198-H025-ERS
AXIS MODULE
COLLATOR UPPER LUG SERVO CONTROLLER AND DRIVE
(CULD)

SAFE OFF
SB+ BYPASS PLUS
SB- BYPASS MINUS
S1 SAFETY ENABLE 1
SC SAFETY ENABLE COM
S2 SAFETY ENABLE 2

SAFE OFF
PAGE 2

296
20
297

*INTALL WITH 1.6'' CLEARANCE TOP AND BOTTOM

**Kinetix 5500 Servo Drive System (top view)**

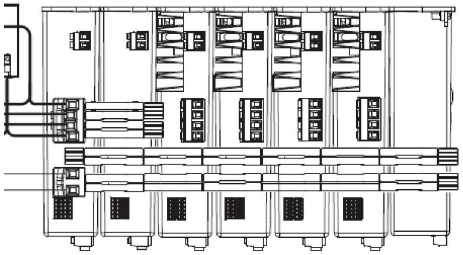

Shared AC (mains AC input)
Shared DC (DC common bus)
Shared 24V (control power inpu

MOTOR FEEDBACK
CONNECTOR
MF

MOTOR CONNECTOR
U V W GND

MOTOR BRAKE
BLK 1
WHT 2
(GROUND MOTOR
BRAKE CABLE
WHEN USED)

PORT 1
PORT 2

IP:10.255.255.131

SINGLE CABLE
2090-CSWM1DF-14AA15

(CLAMP SHIELDED
CABLE TO SERVO)

(#1585J-M8CBJM-2)
(#1585J-M8CBJM-2)

FROM PAGE #16

A BROWN
B BLACK
C BLUE
D GRN/YEL

U V W GND MBRK+ MBRK-
BRAKE

680M

ENCODER

MOTOR
VPL-B1003F-PJ12AA

| 2198-H2DCK CONVERTER KIT PINOUT | | |
|---|---|---|
| TERMINAL | SIGNAL | WIRE COLOR |
| 1 | SIN+ | BLACK |
| 2 | SIN- | WHITE/BLACK |
| 3 | COS+ | RED |
| 4 | COS- | WHITE/RED |
| 5 | DATA+ | GREEN |
| 6 | ECOM | WHITE/GRAY |
| 7 | EPWR_9V | ORANGE |
| 10 | DATA- | WHITE/GREEN |
| 11 | TS+ | WHITE/ORANGE |
| 14 | EPWR_5V | GRAY |

| DIGITAL INPUTS (IOD) CONNECTOR PINOUT | |
|---|---|
| IOD PIN | DESCRIPTION |
| 1 | HIGH SPEED REGISTRATION/HOME POSITION (DUAL FUNCTION INPUT) |
| 2 | I/O COMMON |
| 3 | HIGH SPEED REGISTRATION INPUT. HIGH/LOW OR LOW/HIGH TRIGGERS REGISTRATION |
| 4 | I/O CABLE SHIELD TERMINATION |

NVENIA
A DURAVANT COMPANY

| | | | |
|---|---|---|---|
| REV. | A | ELECTRICAL SCHEMATIC | SIZE: B |
| DESIGNER: | JIT | | DATE: 09/26/2021 |
| MODEL: | TS-2300 | | SHEET: 6 OF |
| BLUE MARBLE | | | DRAWING NUMBER: 210011-06 |

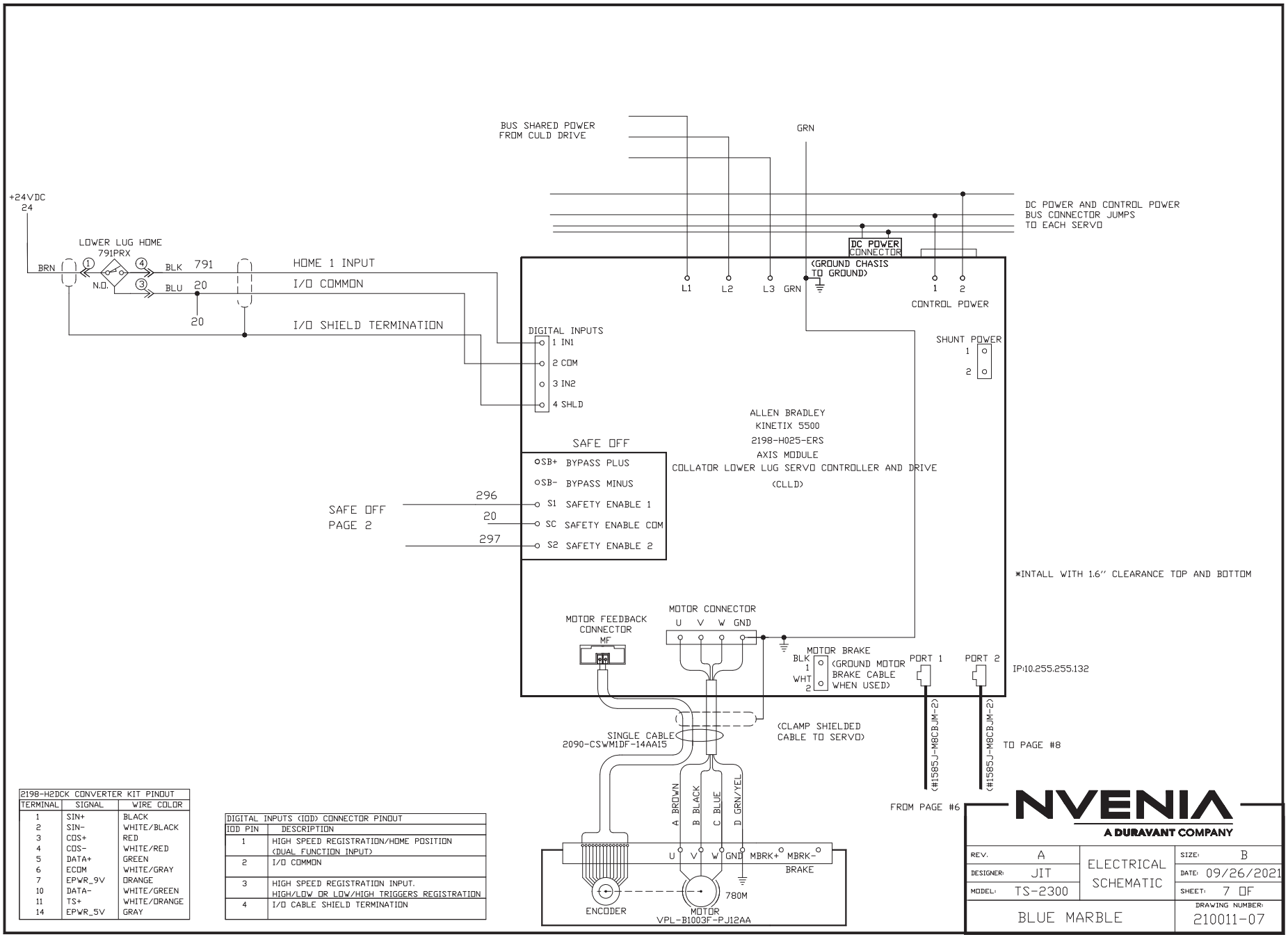


| 2198-H2DCK CONVERTER KIT PINOUT | | |
|---|---|---|
| TERMINAL | SIGNAL | WIRE COLOR |
| 1 | SIN+ | BLACK |
| 2 | SIN- | WHITE/BLACK |
| 3 | COS+ | RED |
| 4 | COS- | WHITE/RED |
| 5 | DATA+ | GREEN |
| 6 | ECOM | WHITE/GRAY |
| 7 | EPWR_9V | ORANGE |
| 10 | DATA- | WHITE/GREEN |
| 11 | TS+ | WHITE/ORANGE |
| 14 | EPWR_5V | GRAY |

| DIGITAL INPUTS (IOD) CONNECTOR PINOUT | |
|---|---|
| IOD PIN | DESCRIPTION |
| 1 | HIGH SPEED REGISTRATION/HOME POSITION (DUAL FUNCTION INPUT) |
| 2 | I/O COMMON |
| 3 | HIGH SPEED REGISTRATION INPUT. HIGH/LOW OR LOW/HIGH TRIGGERS REGISTRATION |
| 4 | I/O CABLE SHIELD TERMINATION |

NVENIA
A DURAVANT COMPANY

| | | | |
|---|---|---|---|
| REV. A | ELECTRICAL SCHEMATIC | SIZE: B | |
| DESIGNER: JIT | | DATE: 09/26/2021 | |
| MODEL: TS-2300 | | SHEET: 7 OF | |
| BLUE MARBLE | | DRAWING NUMBER: 210011-07 | |

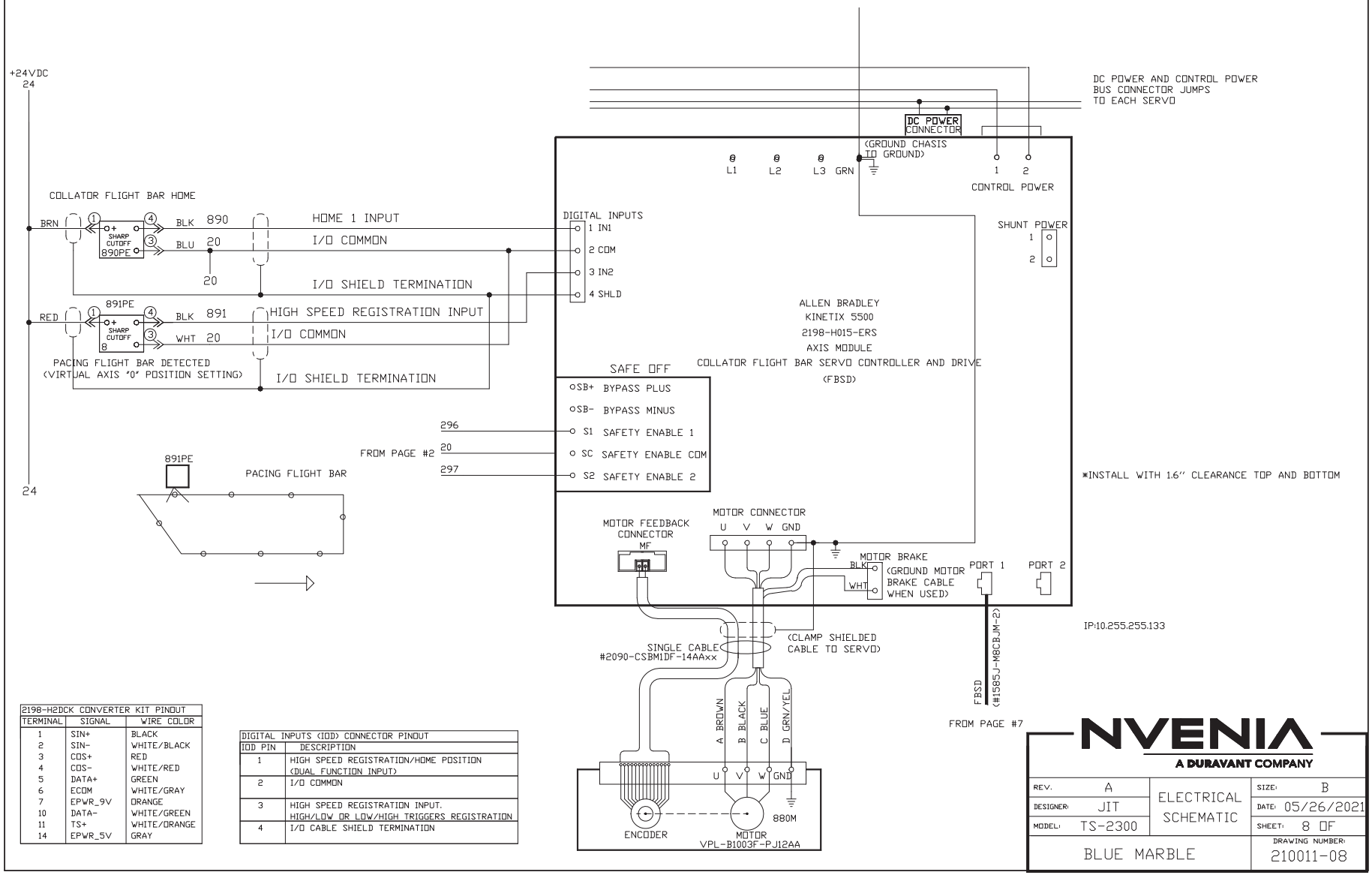


| 2198-H2DCK CONVERTER KIT PINOUT | | |
|---|---|---|
| TERMINAL | SIGNAL | WIRE COLOR |
| 1 | SIN+ | BLACK |
| 2 | SIN- | WHITE/BLACK |
| 3 | COS+ | RED |
| 4 | COS- | WHITE/RED |
| 5 | DATA+ | GREEN |
| 6 | ECOM | WHITE/GRAY |
| 7 | EPWR_9V | ORANGE |
| 10 | DATA- | WHITE/GREEN |
| 11 | TS+ | WHITE/ORANGE |
| 14 | EPWR_5V | GRAY |

| DIGITAL INPUTS (IOD) CONNECTOR PINOUT | |
|---|---|
| IOD PIN | DESCRIPTION |
| 1 | HIGH SPEED REGISTRATION/HOME POSITION (DUAL FUNCTION INPUT) |
| 2 | I/O COMMON |
| 3 | HIGH SPEED REGISTRATION INPUT. HIGH/LOW OR LOW/HIGH TRIGGERS REGISTRATION |
| 4 | I/O CABLE SHIELD TERMINATION |

NVENIA
A DURAVANT COMPANY

| | | | |
|---|---|---|---|
| REV. A | ELECTRICAL SCHEMATIC | SIZE: B | |
| DESIGNER: JIT | | DATE: 05/26/2021 | |
| MODEL: TS-2300 | | SHEET: 8 OF | |
| BLUE MARBLE | | DRAWING NUMBER: 210011-08 | |

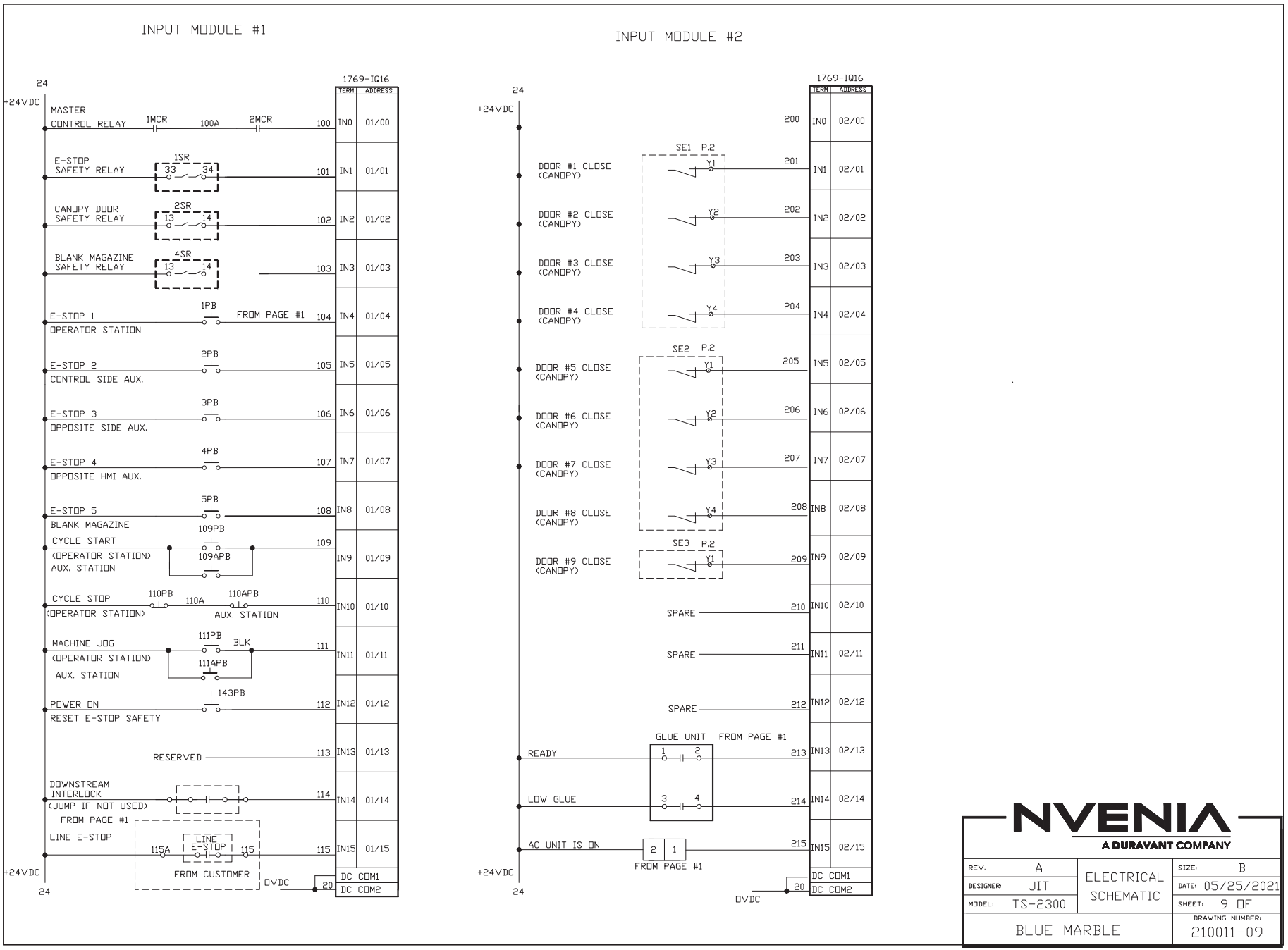


NVENIA
A DURAVANT COMPANY

| | | | |
|---|---|---|---|
| REV. A | ELECTRICAL SCHEMATIC | SIZE: B | |
| DESIGNER: JIT | | DATE: 05/25/2021 | |
| MODEL: TS-2300 | | SHEET: 9 OF | |
| BLUE MARBLE | | DRAWING NUMBER: 210011-09 | |

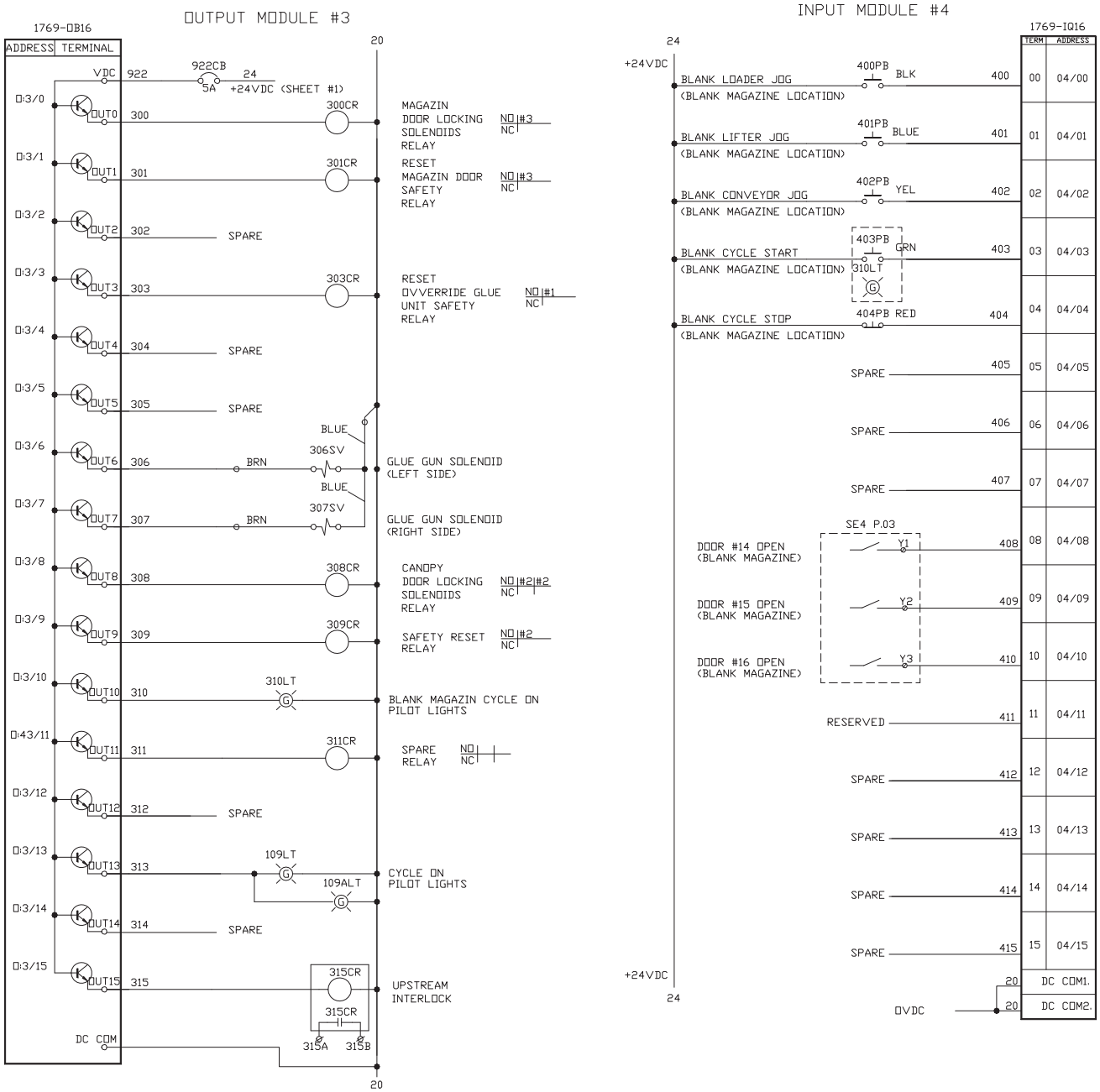


NVENIA
A DURAVANT COMPANY

| | | | |
|---|---|---|---|
| REV. A | ELECTRICAL SCHEMATIC | SIZE: B | |
| DESIGNER: JIT | | DATE: 05/26/2021 | |
| MODEL: TS-2300 | | SHEET: 10 OF | |
| BLUE MARBLE | | DRAWING NUMBER: 210011-10 | |

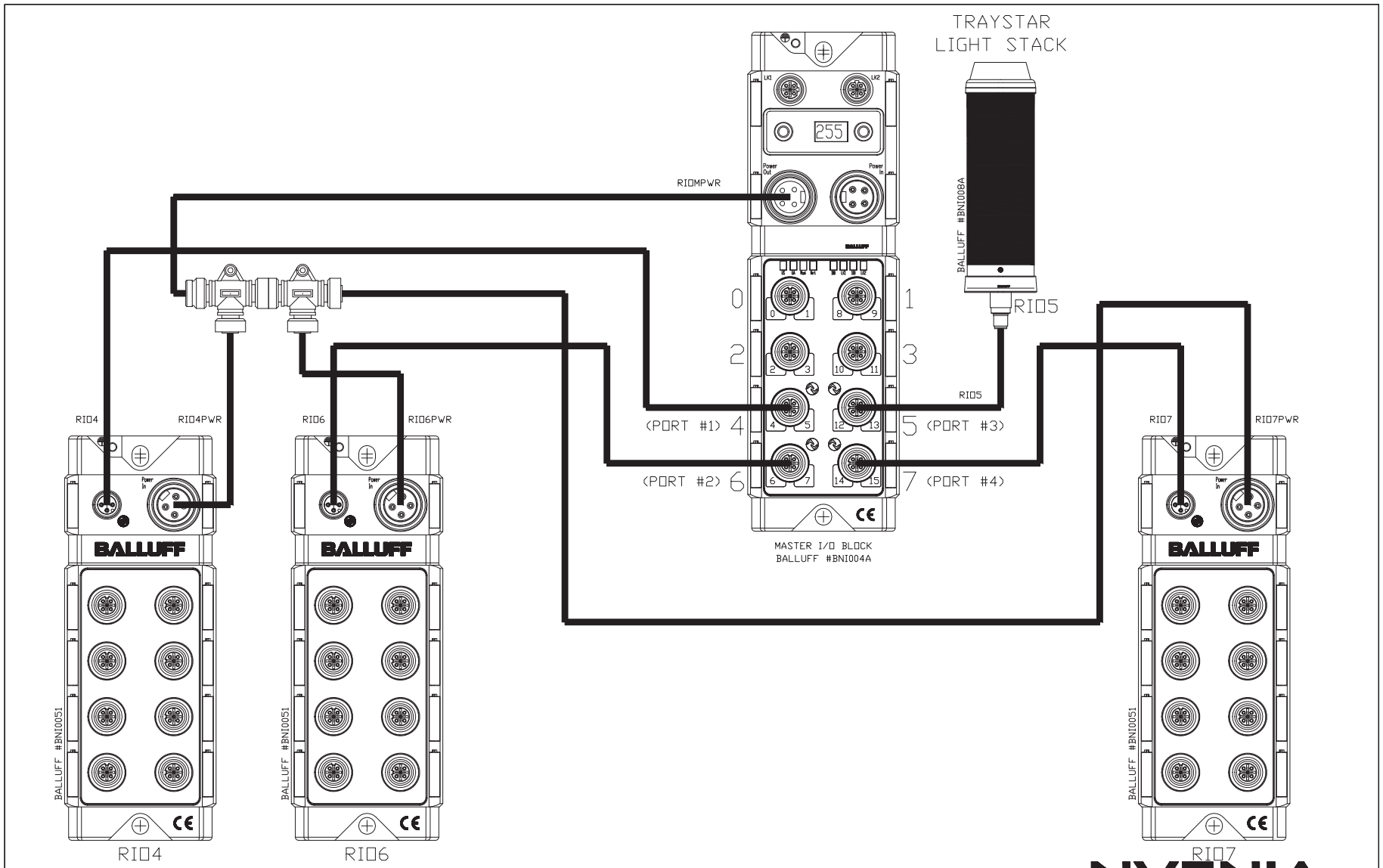


# I/O BLOCK TOPOLOGY

NVENIA
A DURAVANT COMPANY

| | | | |
|---|---|---|---|
| REV. A | ELECTRICAL SCHEMATIC | SIZE: B | |
| DESIGNER: JIT | | DATE: 05/26/2021 | |
| MODEL: TS-2300 | | SHEET: 11 OF | |
| BLUE MARBLE | | DRAWING NUMBER: 210011-11 | |

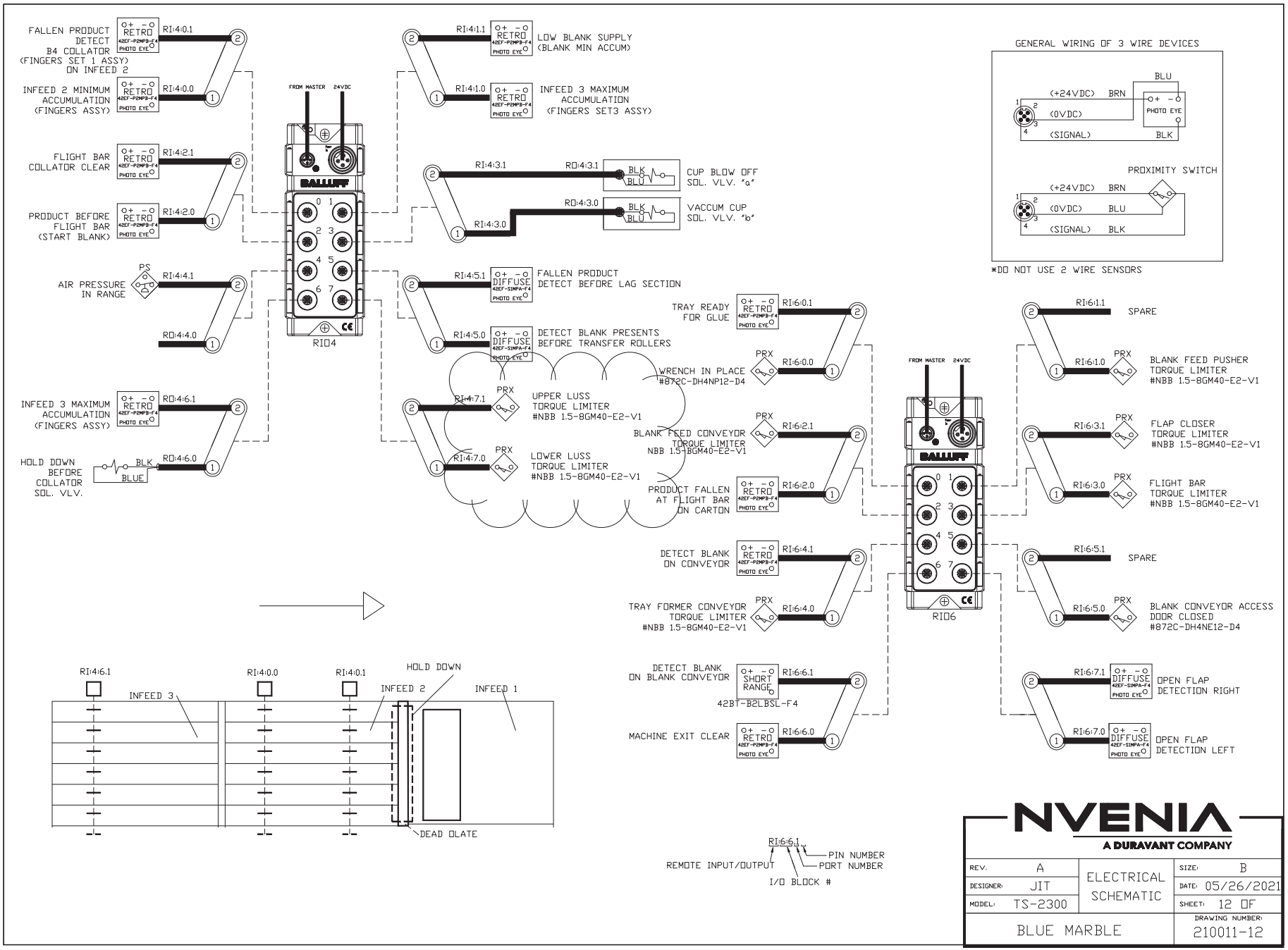
FALLEN PRODUCT DETECT B4 COLLATOR (FINGERS SET 1 ASSY) ON INFEED 2
RI:4:0.1
INFEED 2 MINIMUM ACCUMULATION (FINGERS ASSY)
RI:4:0.0
FLIGHT BAR COLLATOR CLEAR
RI:4:2.1
PRODUCT BEFORE FLIGHT BAR (START BLANK)
RI:4:2.0
AIR PRESSURE IN RANGE
PS
RI:4:4.1
RO:4:4.0
INFEED 3 MAXIMUM ACCUMULATION (FINGERS ASSY)
RO:4:6.1
HOLD DOWN BEFORE COLLATOR SOL. VLV.
BLK
BLUE
RO:4:6.0
FROM MASTER
24VDC
RIO4
RI:4:1.1
LOW BLANK SUPPLY (BLANK MIN ACCUM)
RI:4:1.0
INFEED 3 MAXIMUM ACCUMULATION (FINGERS SET3 ASSY)
RI:4:3.1
RO:4:3.1
CUP BLOW OFF SOL. VLV. "a"
RI:4:3.0
RO:4:3.0
VACCUM CUP SOL. VLV. "b"
RI:4:5.1
FALLEN PRODUCT DETECT BEFORE LAG SECTION
RI:4:5.0
DETECT BLANK PRESENTS BEFORE TRANSFER ROLLERS
RI:4:7.1
UPPER LUSS TORQUE LIMITER #NBB 1.5-8GM40-E2-V1
RI:4:7.0
LOWER LUSS TORQUE LIMITER #NBB 1.5-8GM40-E2-V1
PRX
TRAY READY FOR GLUE
RI:6:0.1
WRENCH IN PLACE #872C-DH4NP12-D4
RI:6:0.0
BLANK FEED CONVEYOR TORQUE LIMITER NBB 1.5-8GM40-E2-V1
RI:6:2.1
PRODUCT FALLEN AT FLIGHT BAR ON CARTON
RI:6:2.0
DETECT BLANK ON CONVEYOR
RI:6:4.1
TRAY FORMER CONVEYOR TORQUE LIMITER #NBB 1.5-8GM40-E2-V1
RI:6:4.0
DETECT BLANK ON BLANK CONVEYOR
SHORT RANGE
RI:6:6.1
42BT-B2LBSL-F4
MACHINE EXIT CLEAR
RI:6:6.0
RIO6
RI:6:1.1
SPARE
RI:6:1.0
BLANK FEED PUSHER TORQUE LIMITER #NBB 1.5-8GM40-E2-V1
RI:6:3.1
FLAP CLOSER TORQUE LIMITER #NBB 1.5-8GM40-E2-V1
RI:6:3.0
FLIGHT BAR TORQUE LIMITER #NBB 1.5-8GM40-E2-V1
RI:6:5.1
SPARE
RI:6:5.0
BLANK CONVEYOR ACCESS DOOR CLOSED #872C-DH4NE12-D4
RI:6:7.1
OPEN FLAP DETECTION RIGHT
RI:6:7.0
OPEN FLAP DETECTION LEFT
GENERAL WIRING OF 3 WIRE DEVICES
(+24VDC) BRN
(0VDC) BLU
(SIGNAL) BLK
PHOTO EYE
PROXIMITY SWITCH
*DO NOT USE 2 WIRE SENSORS
RI:4:6.1
RI:4:0.0
RI:4:0.1
HOLD DOWN
INFEED 3
INFEED 2
INFEED 1
DEAD PLATE
RI:6:6.1
PIN NUMBER
PORT NUMBER
REMOTE INPUT/OUTPUT
I/O BLOCK #
NVENIA
A DURAVANT COMPANY
REV. A
DESIGNER: JIT
MODEL: TS-2300
ELECTRICAL SCHEMATIC
SIZE: B
DATE: 05/26/2021
SHEET: 12 OF
BLUE MARBLE
DRAWING NUMBER: 210011-12

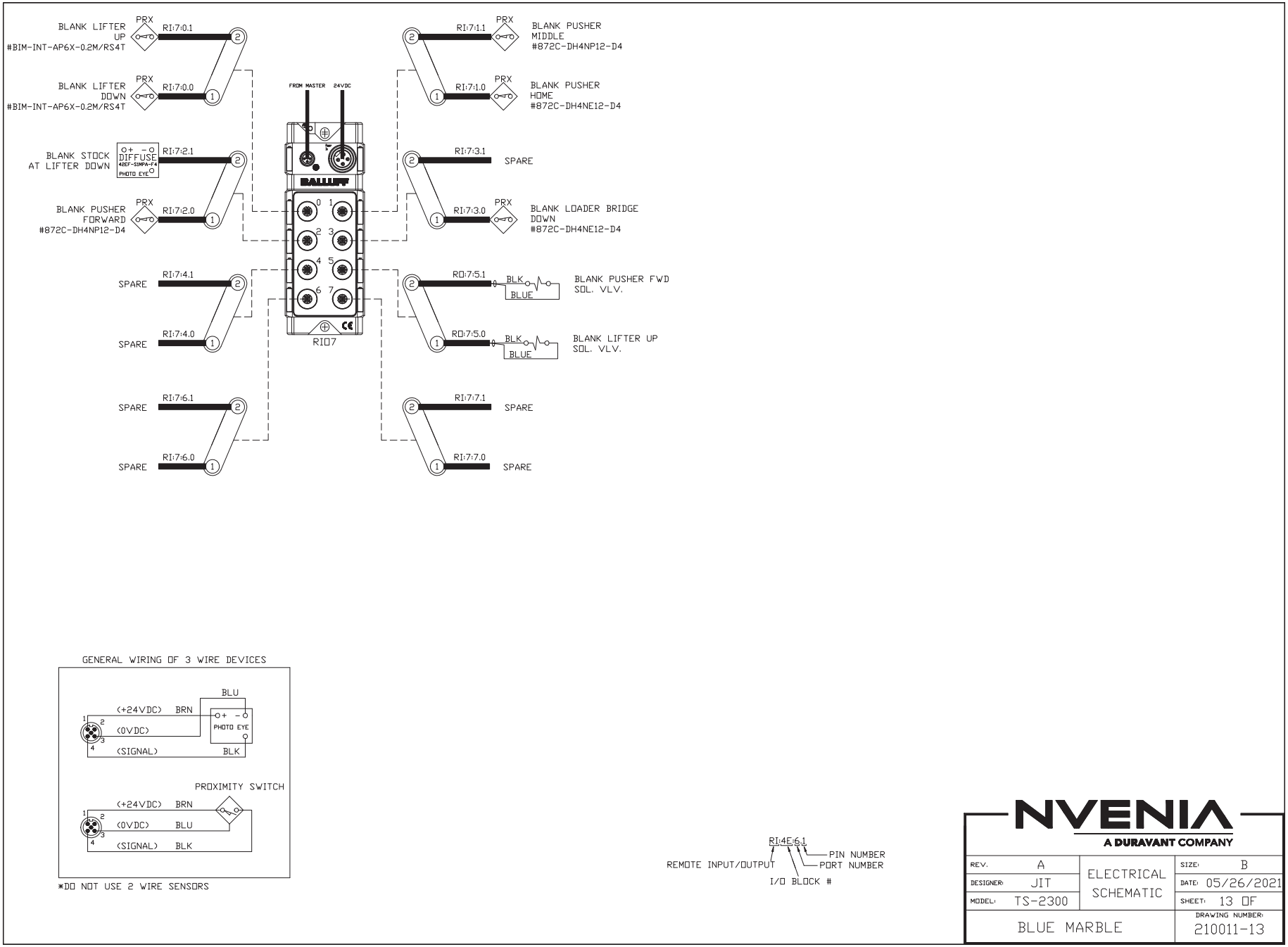


NVENIA
A DURAVANT COMPANY

| | | | |
|---|---|---|---|
| REV. A | ELECTRICAL SCHEMATIC | SIZE: B | |
| DESIGNER: JIT | | DATE: 05/26/2021 | |
| MODEL: TS-2300 | | SHEET: 13 OF | |
| BLUE MARBLE | | DRAWING NUMBER: 210011-13 | |

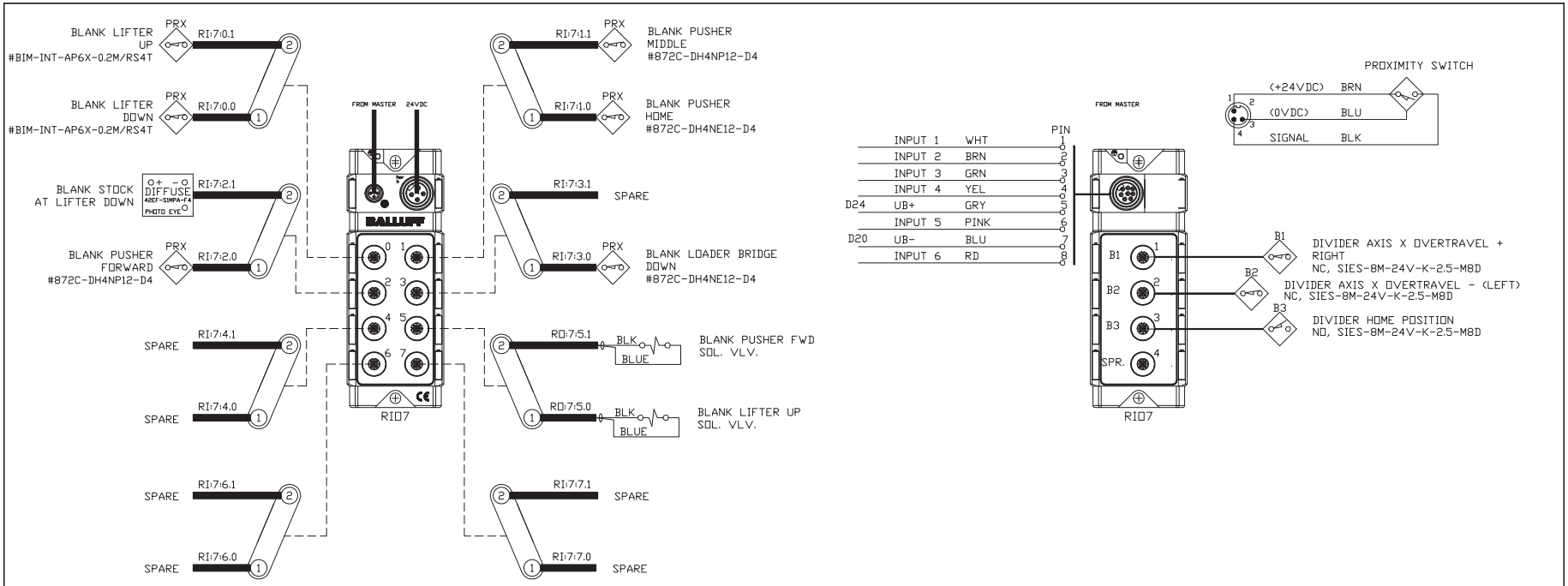


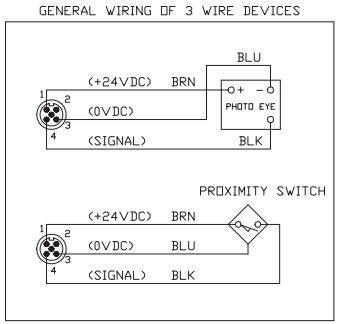


*DO NOT USE 2 WIRE SENSORS

RI:4E:6.1

REMOTE INPUT/OUTPUT

I/O BLOCK #

PORT NUMBER

PIN NUMBER

NVENIA
A DURAVANT COMPANY

| | | | |
|---|---|---|---|
| REV. A | ELECTRICAL SCHEMATIC | SIZE: B | |
| DESIGNER: JIT | | DATE: 05/26/2021 | |
| MODEL: TS-2300 | | SHEET: 13 OF | |
| BLUE MARBLE | | DRAWING NUMBER: 210011-13 | |

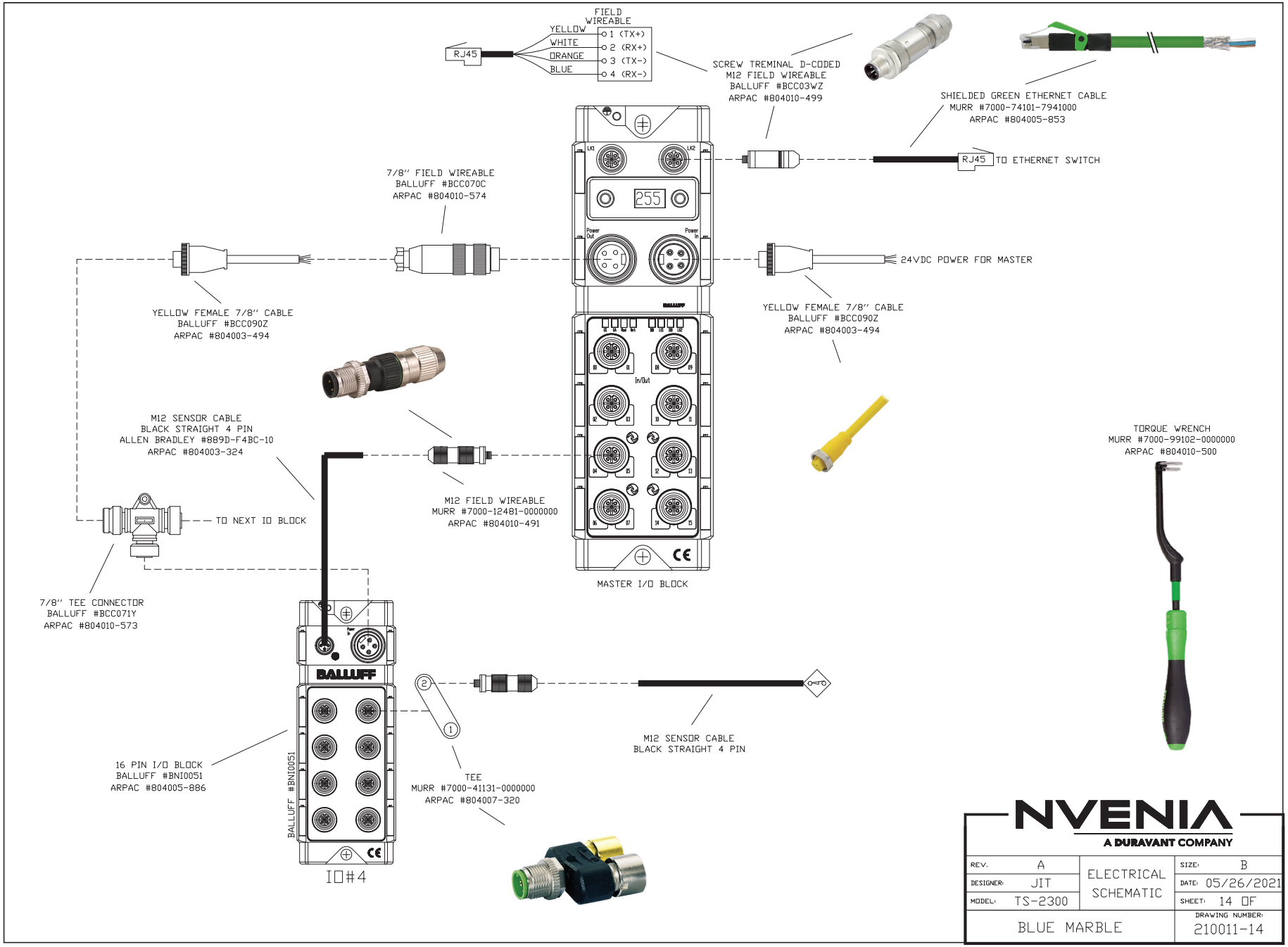


NVENIA
A DURAVANT COMPANY

| | | | |
|---|---|---|---|
| REV. A | ELECTRICAL SCHEMATIC | SIZE: B | |
| DESIGNER: JIT | | DATE: 05/26/2021 | |
| MODEL: TS-2300 | | SHEET: 14 OF | |
| BLUE MARBLE | | DRAWING NUMBER: 210011-14 | |

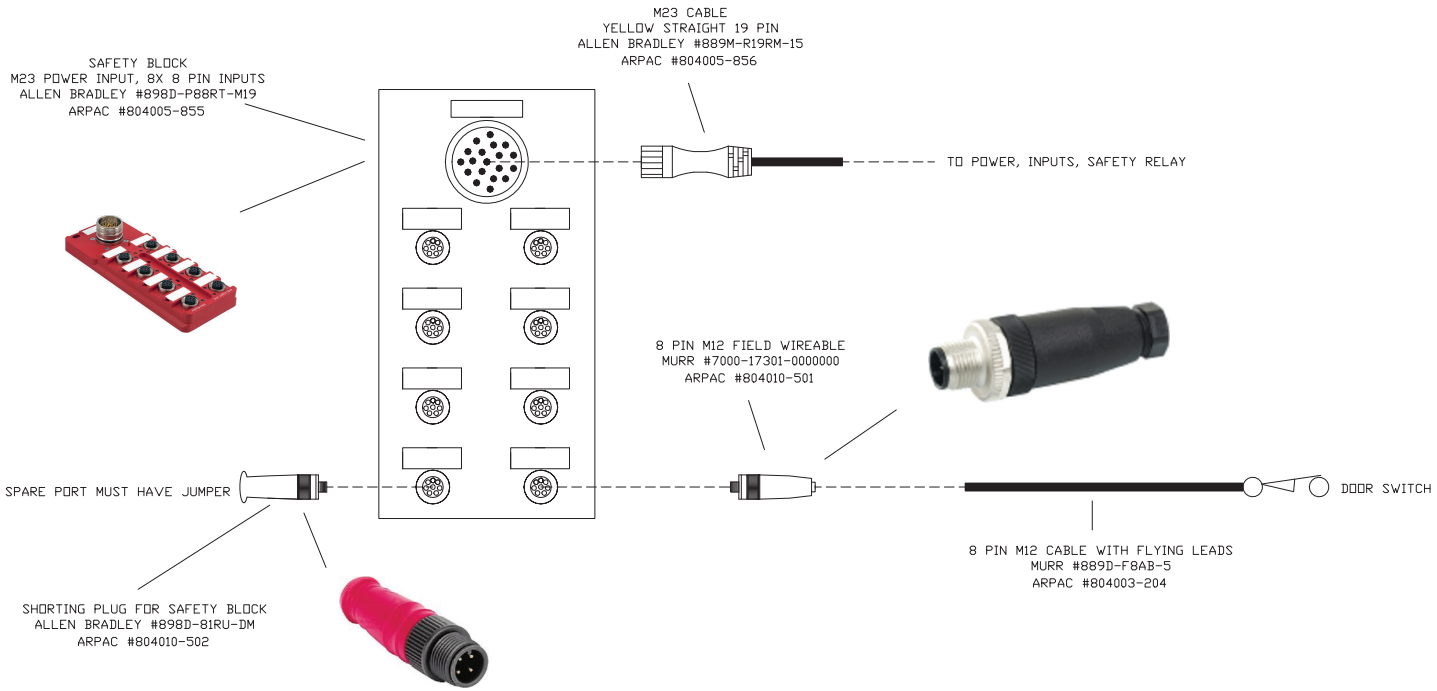


NVENIA
A DURAVANT COMPANY

| | | | |
|---|---|---|---|
| REV. A | ELECTRICAL SCHEMATIC | SIZE: B | |
| DESIGNER: JIT | | DATE: 05/26/2021 | |
| MODEL: TS-2300 | | SHEET: 15 OF | |
| BLUE MARBLE | | DRAWING NUMBER: 210011-15 | |

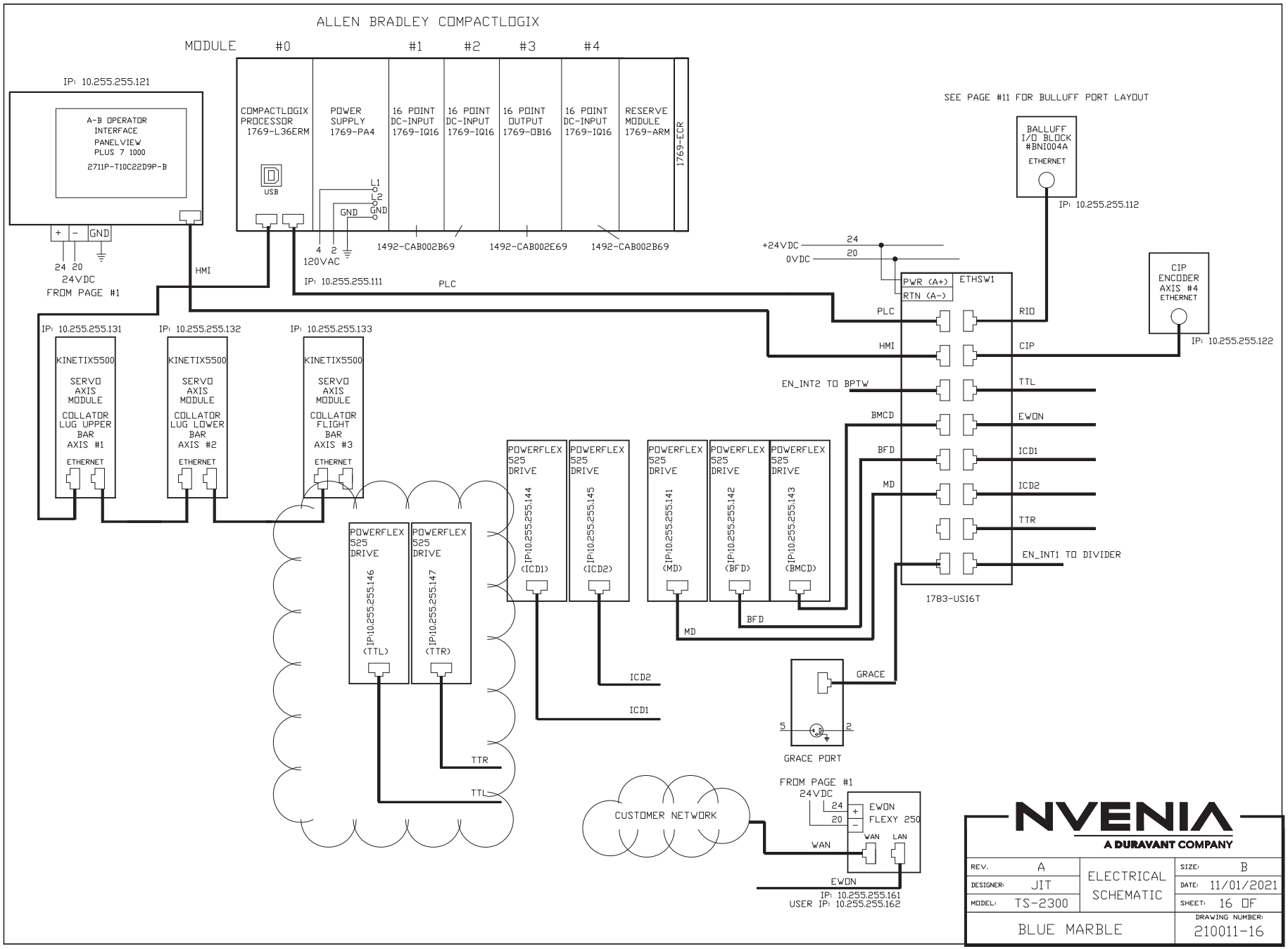
ALLEN BRADLEY COMPACTLOGIX
MODULE #0 #1 #2 #3 #4
IP: 10.255.255.121
A-B OPERATOR INTERFACE PANELVIEW PLUS 7 1000
2711P-T10C22D9P-B
COMPACTLOGIX PROCESSOR 1769-L36ERM
USB
POWER SUPPLY 1769-PA4
16 POINT DC-INPUT 1769-IQ16
16 POINT DC-INPUT 1769-IQ16
16 POINT OUTPUT 1769-OB16
16 POINT DC-INPUT 1769-IQ16
RESERVE MODULE 1769-ARM
1769-ECR
L1
L2
GND
GND
4 2
120VAC
IP: 10.255.255.111
1492-CAB002B69
1492-CAB002E69
1492-CAB002B69
+ - GND
24 20
24VDC
FROM PAGE #1
HMI
PLC
SEE PAGE #11 FOR BULLUFF PORT LAYOUT
BALLUFF I/O BLOCK #BNI004A
ETHERNET
IP: 10.255.255.112
+24VDC
0VDC
24
20
PWR (A+)
RTN (A-)
ETHSW1
PLC
HMI
EN_INT2 TO BPTW
BMCD
BFD
MD
RIO
CIP
TTL
EWON
ICD1
ICD2
TTR
EN_INT1 TO DIVIDER
1783-US16T
CIP ENCODER AXIS #4 ETHERNET
IP: 10.255.255.122
IP: 10.255.255.131
IP: 10.255.255.132
IP: 10.255.255.133
KINETIX5500 SERVO AXIS MODULE COLLATOR LUG UPPER BAR AXIS #1
KINETIX5500 SERVO AXIS MODULE COLLATOR LUG LOWER BAR AXIS #2
KINETIX5500 SERVO AXIS MODULE COLLATOR FLIGHT BAR AXIS #3
ETHERNET
POWERFLEX 525 DRIVE
IP:10.255.255.144 (ICD1)
IP:10.255.255.145 (ICD2)
IP:10.255.255.141 (MD)
IP:10.255.255.142 (BFD)
IP:10.255.255.143 (BMCD)
IP:10.255.255.146 (TTL)
IP:10.255.255.147 (TTR)
ICD2
ICD1
TTR
TTL
MD
BFD
GRACE
5
2
GRACE PORT
CUSTOMER NETWORK
FROM PAGE #1
24VDC
24
20
EWON FLEXY 250
WAN
LAN
WAN
EWON
IP: 10.255.255.161
USER IP: 10.255.255.162
NVENIA
A DURAVANT COMPANY
REV. A
DESIGNER: JIT
MODEL: TS-2300
ELECTRICAL SCHEMATIC
SIZE: B
DATE: 11/01/2021
SHEET: 16 OF
BLUE MARBLE
DRAWING NUMBER: 210011-16

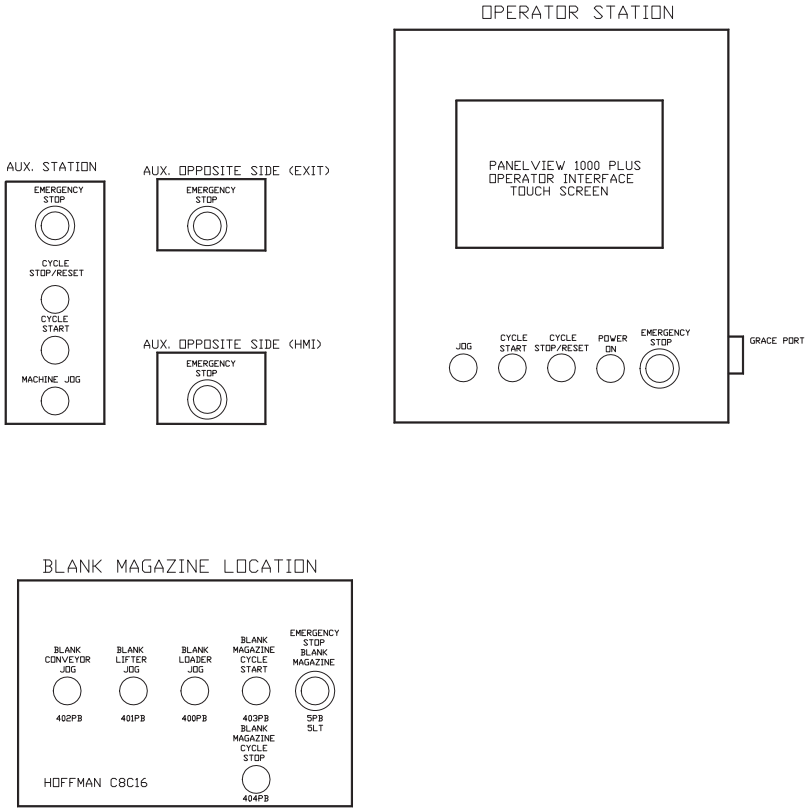


NVENIA
A DURAVANT COMPANY

| | | | |
|---|---|---|---|
| REV. A | ELECTRICAL SCHEMATIC | SIZE: B | |
| DESIGNER: JIT | | DATE: 05/26/2021 | |
| MODEL: TS-2300 | | SHEET: 17 OF | |
| BLUE MARBLE | | DRAWING NUMBER: 210011-17 | |

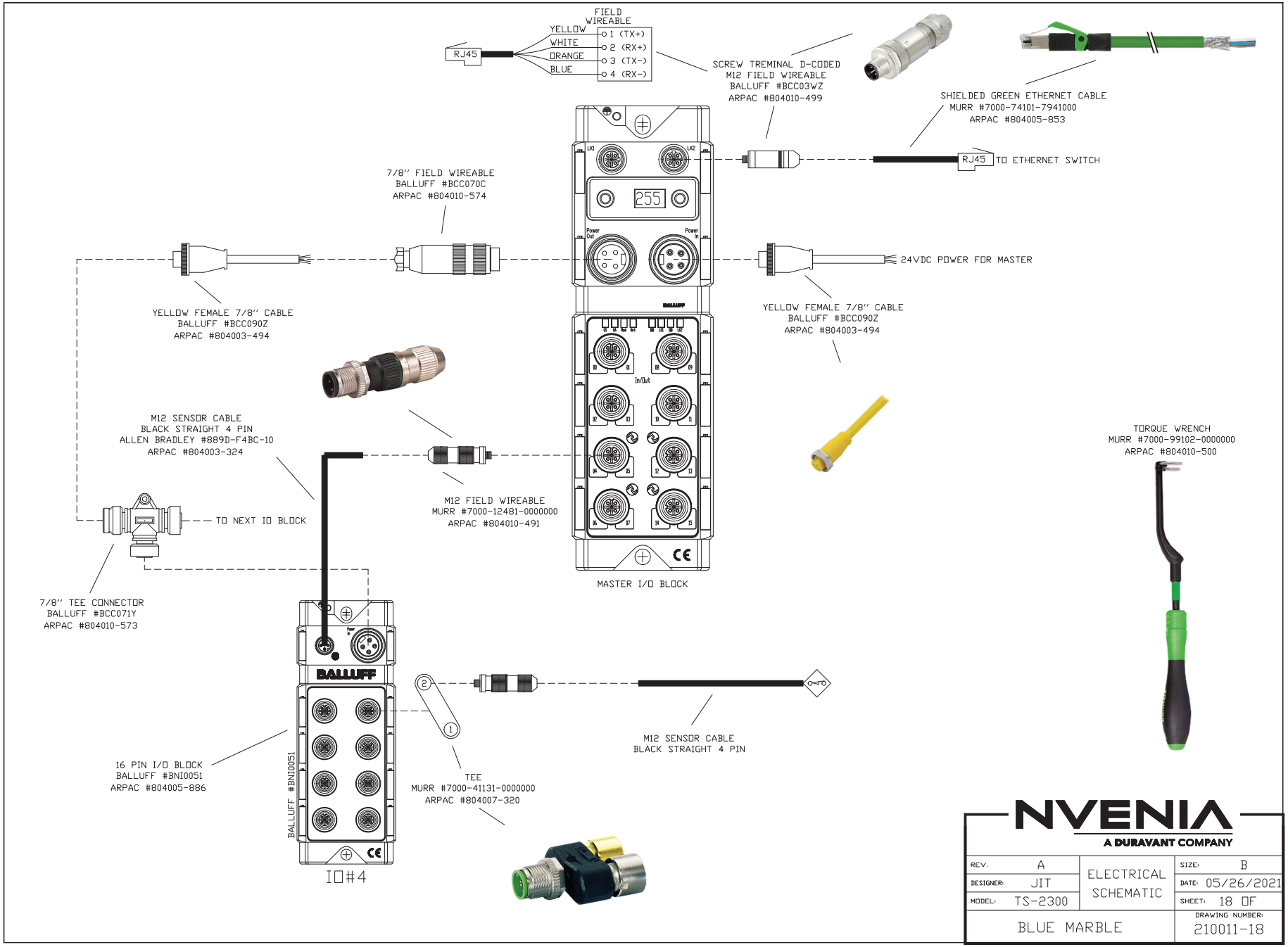


NVENIA
A DURAVANT COMPANY

| | | | |
|---|---|---|---|
| REV. A | ELECTRICAL SCHEMATIC | SIZE: B | |
| DESIGNER: JIT | | DATE: 05/26/2021 | |
| MODEL: TS-2300 | | SHEET: 18 OF | |
| BLUE MARBLE | | DRAWING NUMBER: 210011-18 | |

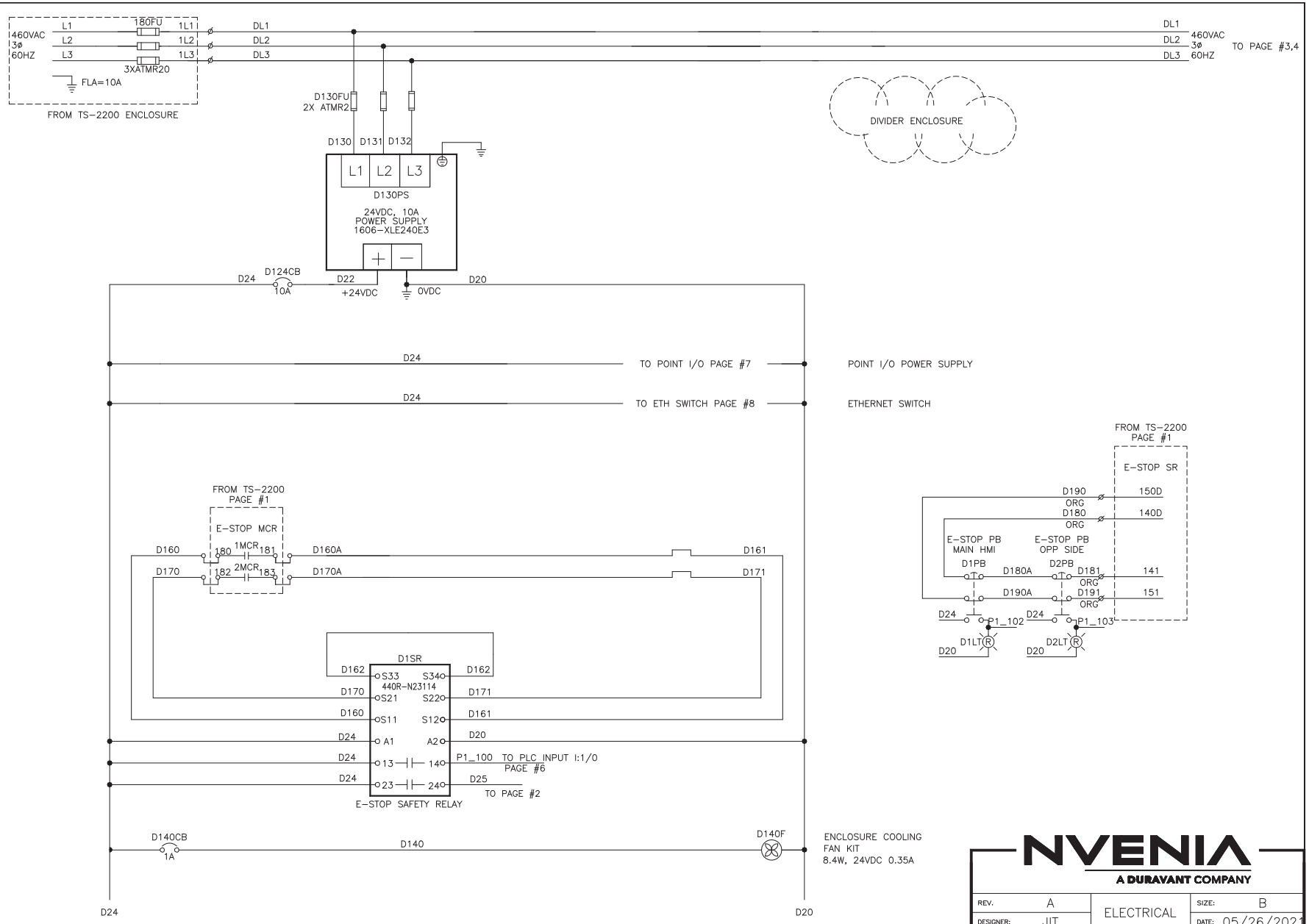


NVENIA
A DURAVANT COMPANY

| | | | |
|---|---|---|---|
| REV. A | ELECTRICAL SCHEMATIC | SIZE: B | |
| DESIGNER: JIT | | DATE: 05/26/2021 | |
| MODEL: TS-2300 | | SHEET: 1 OF | |
| BLUE MARBLE | | DRAWING NUMBER: 210011-DD01 | |

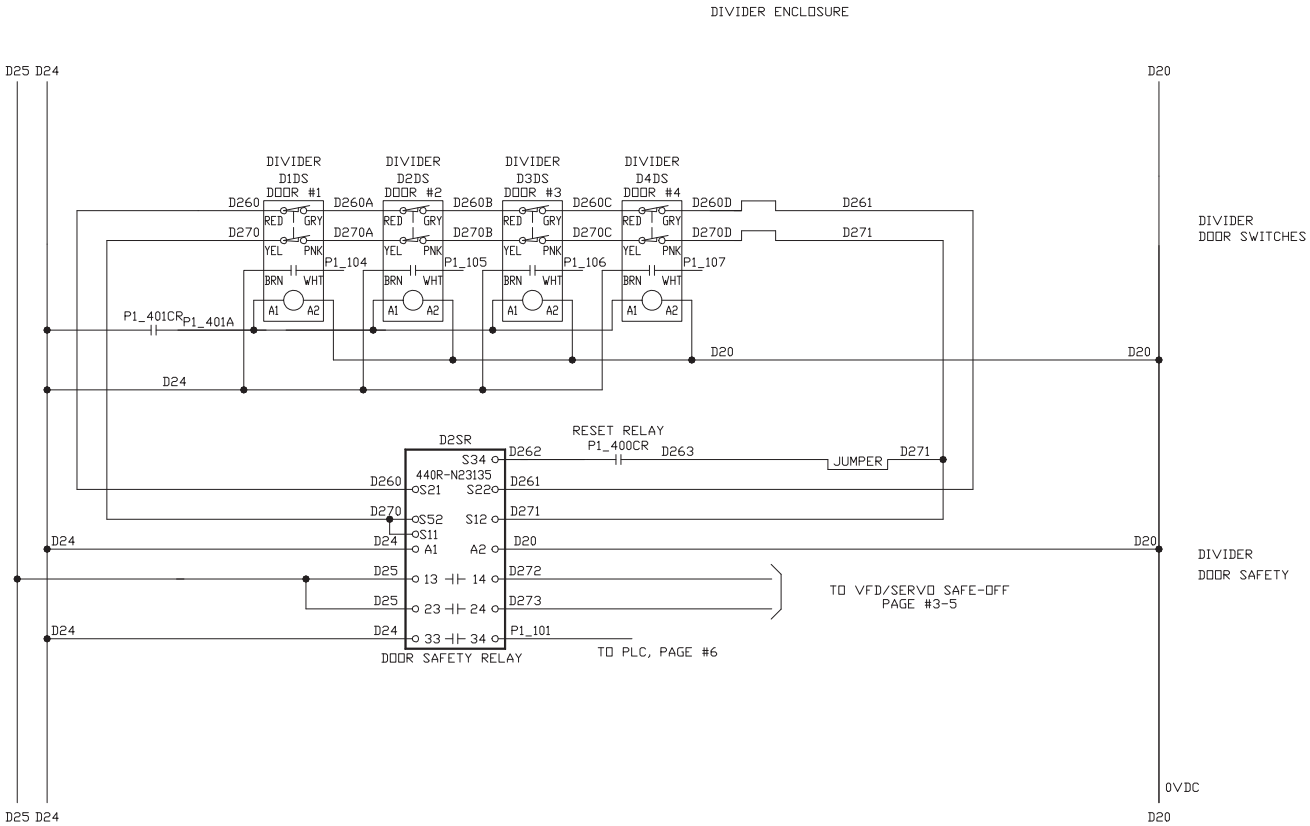


## 440G-T2NBBPH-1L LOCKABLE LOCKABLE DOOR SWITCH TERMINAL WIRING

| TERMINAL | COLOR | DESCRIPTION |
|---|---|---|
| A1 | GRN | SOLENOID POWER |
| A2 | BLUE | 0VDC |
| 11 | RED | SAFETY A |
| 12 | RED/BLK | SAFETY A |
| 21 | RED/WHT | SAFETY B |
| 22 | RED/YEL | SAFETY B |
| 33 | BRN | +24 VDC |
| 34 | WHT | AUX. CONTACT (TO PLC) |
| 41 | N/A | *NOT CONNECTED |
| 42 | N/A | *NOT CONNECTED |
| 53 | N/A | *NOT CONNECTED |
| 54 | N/A | *NOT CONNECTED |

**REMOVE JUMPER BETWEEN 12 AND 41

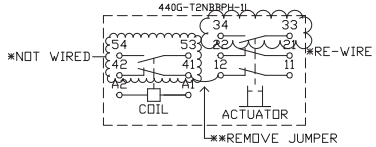


NVENIA
A DURAVANT COMPANY

| | | | |
|---|---|---|---|
| REV. A | ELECTRICAL SCHEMATIC | SIZE: B | |
| DESIGNER: JIT | | DATE: 05/26/2021 | |
| MODEL: TS-2300 | | SHEET: 2 OF | |
| BLUE MARBLE | | DRAWING NUMBER: 210011-DD02 | |

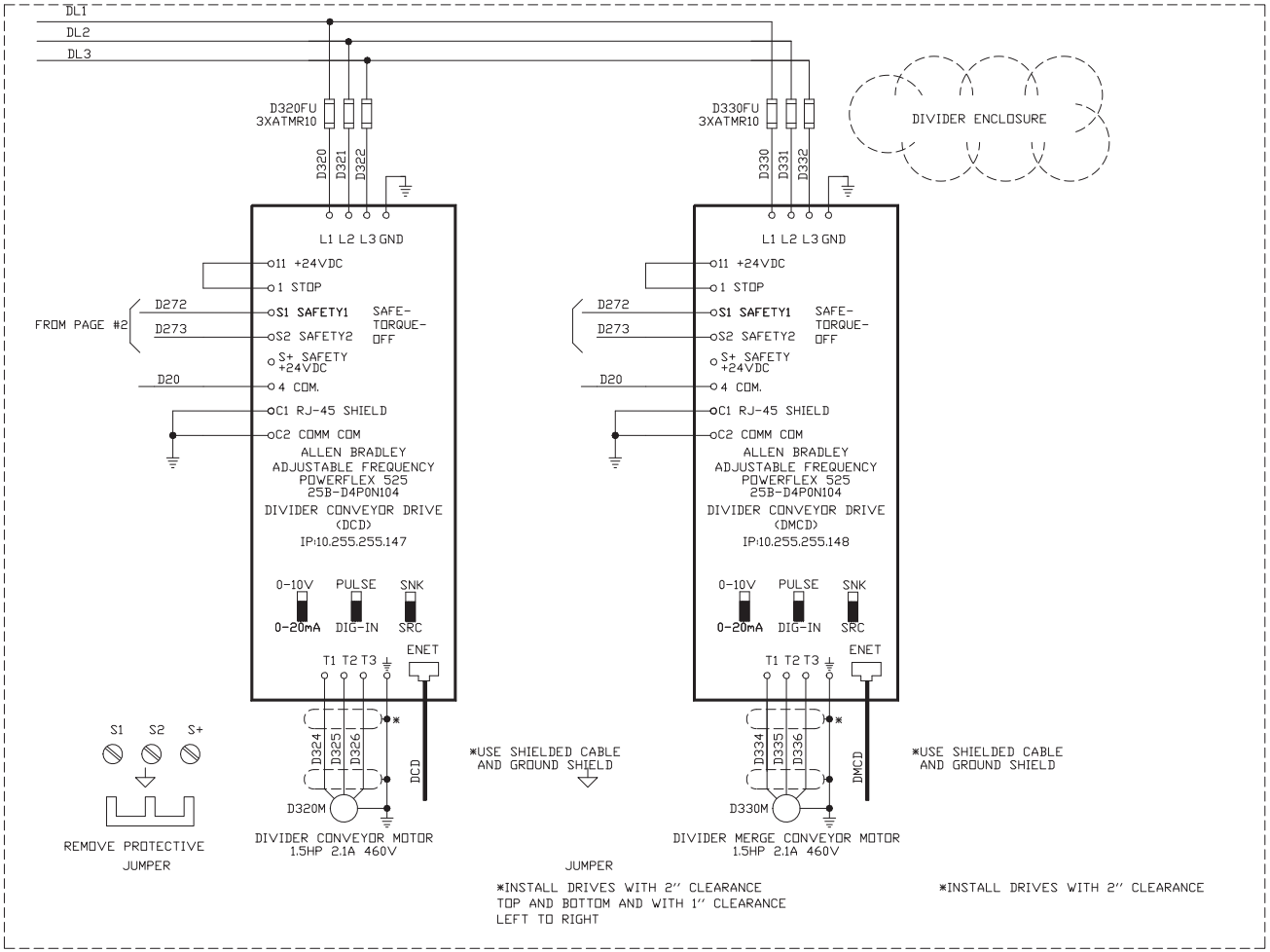


0103CB

CIRCUIT BREAKER NUMBER

PAGE NUMBER

**POWER FLEX 525 DRIVE SET UP (DIFFERENT THAN DEFAULT)**

| DISPLAY | PARAMETER DESCRIPTIONS | SETTING |
|---|---|---|
| P031 | RATED VOLTAGE | 460 |
| P033 | MOTOR OL CURRENT | * |
| P046 | START SOURCE 1 | 5 (ETH) |
| P047 | SPEED REFERENCE 1 | 15 (ETH) |
| P041 | ACCELERATION TIME | 1 SEC |
| P042 | DECELERATION TIME | 1 SEC |
| P044 | MAX FREQUENCY | 90 HZ |
| A541 | AUTO RESTART TRIES | 0.0 |
| A543 | START AT POWER UP | 1.0 |

* SET TO THE MAXIMUM ALLOWABLE MOTOR CURRENT

**POWER FLEX 525 DRIVE SET UP (DIFFERENT THAN DEFAULT)**

| DISPLAY | PARAMETER DESCRIPTIONS | SETTING |
|---|---|---|
| C128 | EN ADDR SELECT | 1 |
| C129 | EN IP ADDR CFG 1 | 10 |
| C130 | EN IP ADDR CFG 2 | 255 |
| C131 | EN IP ADDR CFG 3 | 255 |
| C132 | EN IP ADDR CFG 4 | ** |
| C133 | EN SUBNET CFG 1 | 255 |
| C134 | EN SUBNET CFG 2 | 255 |
| C135 | EN SUBNET CFG 3 | 255 |
| C136 | EN SUBNET CFG 4 | 0 |

**SEE PAGE #8 FOR LAST IP NUMBER

NVENIA
A DURAVANT COMPANY

| | | | |
|---|---|---|---|
| REV. A | ELECTRICAL SCHEMATIC | SIZE: B | |
| DESIGNER: JIT | | DATE: 04/20/2021 | |
| MODEL: TS-2300 | | SHEET: 3 OF | |
| BLUE MARBLE | | DRAWING NUMBER: 210011-DD01 | |

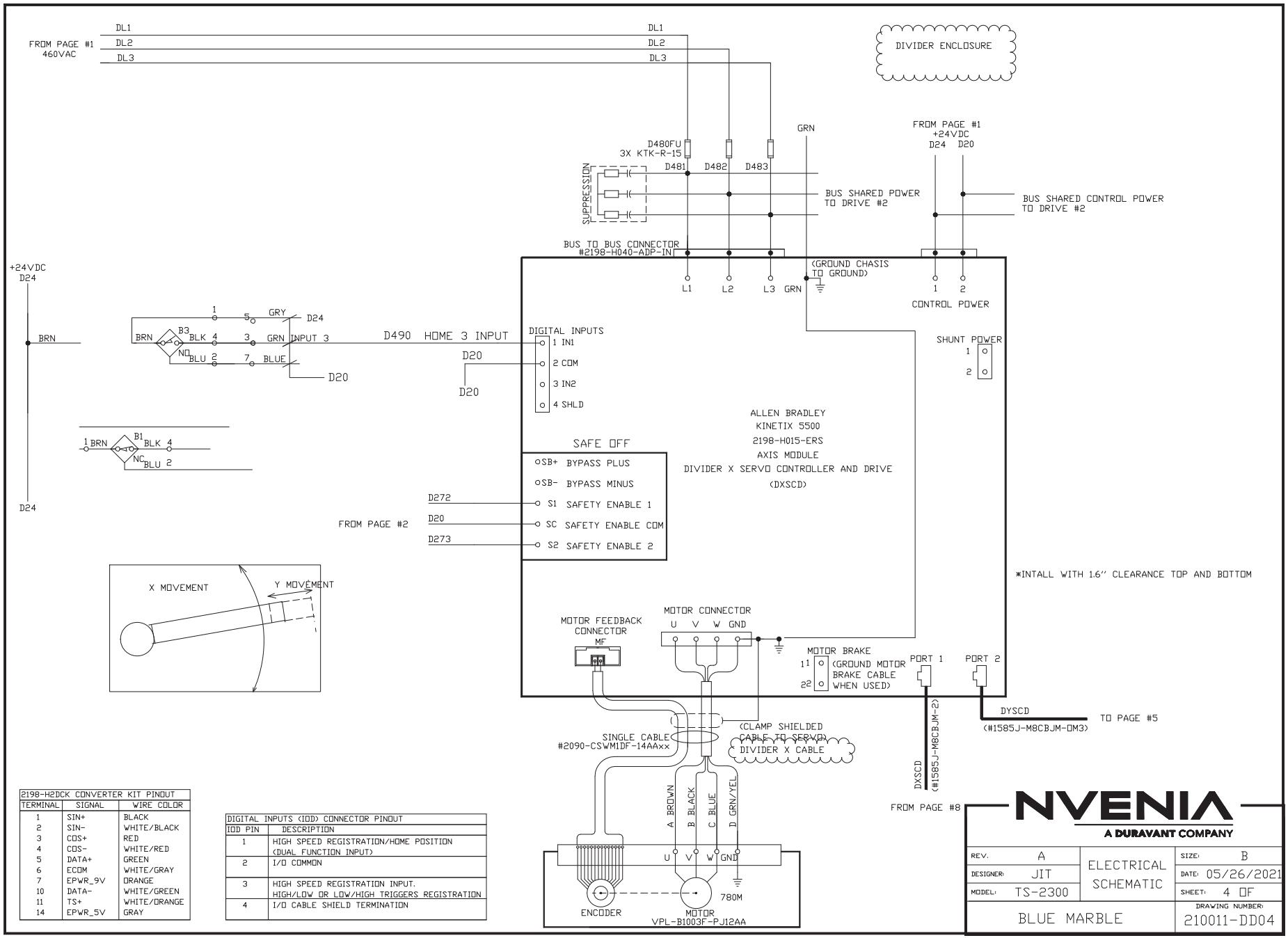


| 2198-H2DCK CONVERTER KIT PINOUT | | |
|---|---|---|
| TERMINAL | SIGNAL | WIRE COLOR |
| 1 | SIN+ | BLACK |
| 2 | SIN- | WHITE/BLACK |
| 3 | COS+ | RED |
| 4 | COS- | WHITE/RED |
| 5 | DATA+ | GREEN |
| 6 | ECOM | WHITE/GRAY |
| 7 | EPWR_9V | ORANGE |
| 10 | DATA- | WHITE/GREEN |
| 11 | TS+ | WHITE/ORANGE |
| 14 | EPWR_5V | GRAY |

| DIGITAL INPUTS (IOD) CONNECTOR PINOUT | |
|---|---|
| IOD PIN | DESCRIPTION |
| 1 | HIGH SPEED REGISTRATION/HOME POSITION (DUAL FUNCTION INPUT) |
| 2 | I/O COMMON |
| 3 | HIGH SPEED REGISTRATION INPUT. HIGH/LOW OR LOW/HIGH TRIGGERS REGISTRATION |
| 4 | I/O CABLE SHIELD TERMINATION |

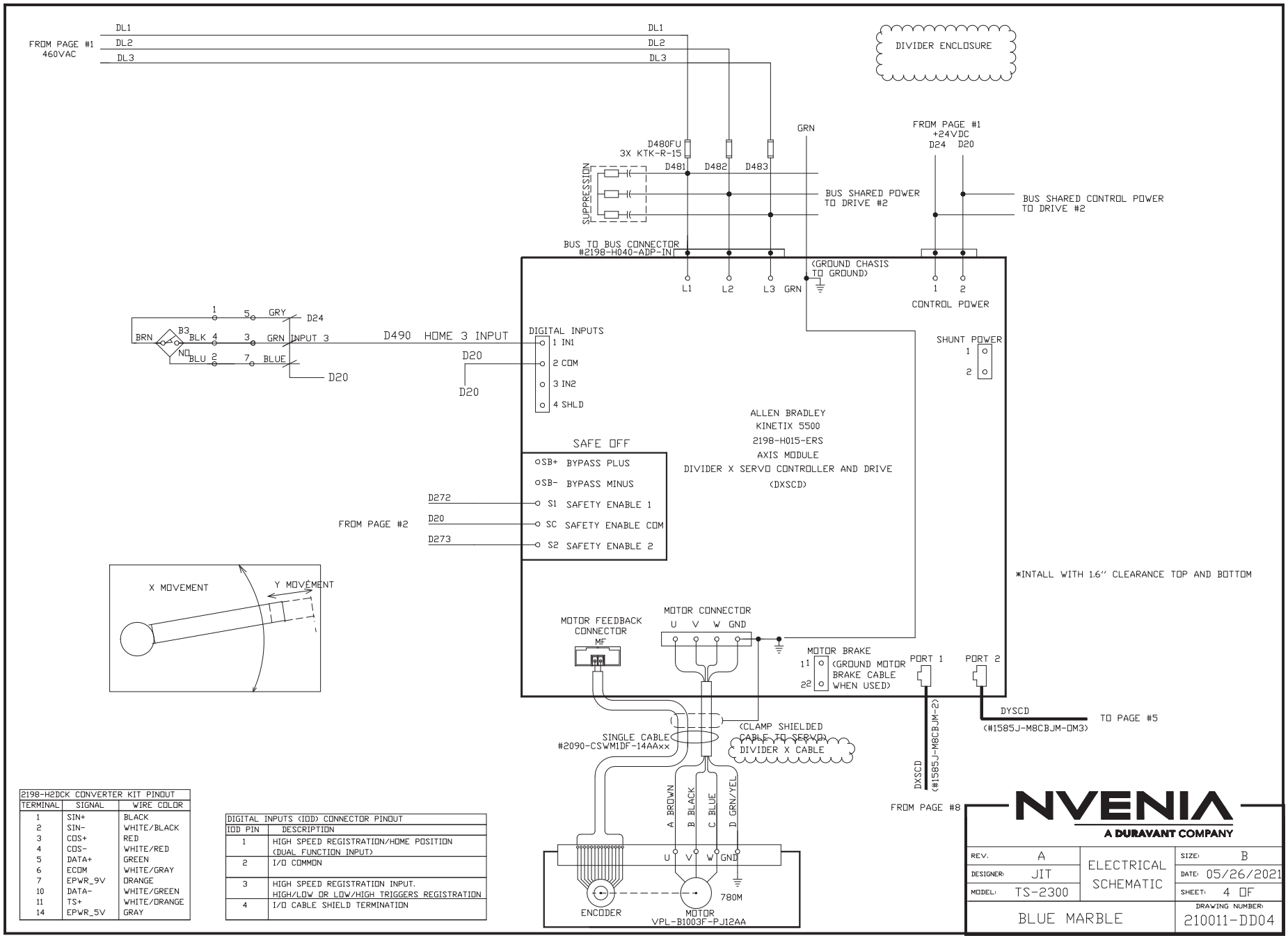


| 2198-H2DCK CONVERTER KIT PINOUT | | |
|---|---|---|
| TERMINAL | SIGNAL | WIRE COLOR |
| 1 | SIN+ | BLACK |
| 2 | SIN- | WHITE/BLACK |
| 3 | COS+ | RED |
| 4 | COS- | WHITE/RED |
| 5 | DATA+ | GREEN |
| 6 | ECOM | WHITE/GRAY |
| 7 | EPWR_9V | ORANGE |
| 10 | DATA- | WHITE/GREEN |
| 11 | TS+ | WHITE/ORANGE |
| 14 | EPWR_5V | GRAY |

| DIGITAL INPUTS (IOD) CONNECTOR PINOUT | |
|---|---|
| IOD PIN | DESCRIPTION |
| 1 | HIGH SPEED REGISTRATION/HOME POSITION (DUAL FUNCTION INPUT) |
| 2 | I/O COMMON |
| 3 | HIGH SPEED REGISTRATION INPUT. HIGH/LOW OR LOW/HIGH TRIGGERS REGISTRATION |
| 4 | I/O CABLE SHIELD TERMINATION |

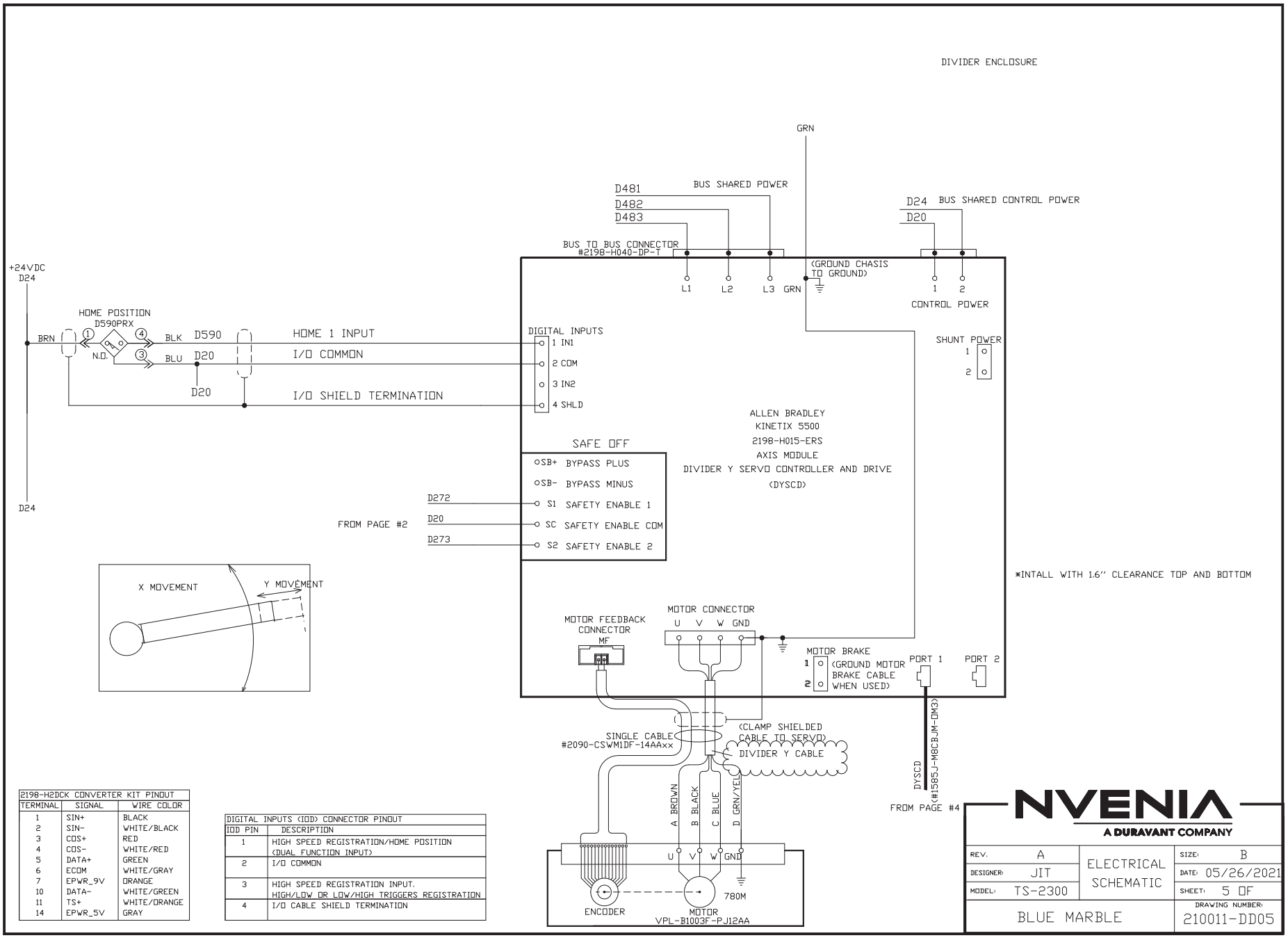


| 2198-H2DCK CONVERTER KIT PINOUT | | |
|---|---|---|
| TERMINAL | SIGNAL | WIRE COLOR |
| 1 | SIN+ | BLACK |
| 2 | SIN- | WHITE/BLACK |
| 3 | COS+ | RED |
| 4 | COS- | WHITE/RED |
| 5 | DATA+ | GREEN |
| 6 | ECOM | WHITE/GRAY |
| 7 | EPWR_9V | ORANGE |
| 10 | DATA- | WHITE/GREEN |
| 11 | TS+ | WHITE/ORANGE |
| 14 | EPWR_5V | GRAY |

| DIGITAL INPUTS (IOD) CONNECTOR PINOUT | |
|---|---|
| IOD PIN | DESCRIPTION |
| 1 | HIGH SPEED REGISTRATION/HOME POSITION (DUAL FUNCTION INPUT) |
| 2 | I/O COMMON |
| 3 | HIGH SPEED REGISTRATION INPUT. HIGH/LOW OR LOW/HIGH TRIGGERS REGISTRATION |
| 4 | I/O CABLE SHIELD TERMINATION |

DIVIDER ENCLOSURE

## POINT I/O RACK #1 - INPUT MODULE #1

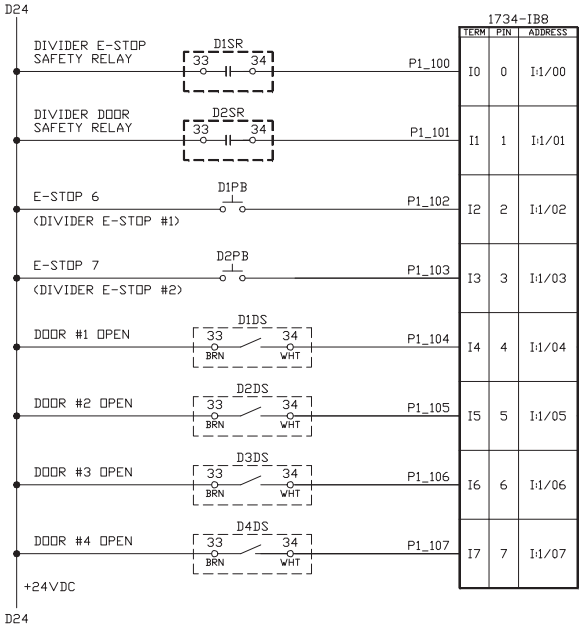


## POINT I/O RACK #1 - INPUT MODULE #2

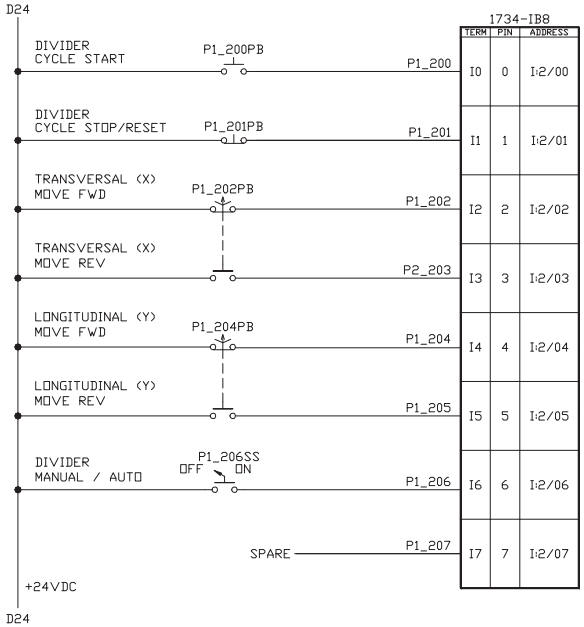


TERMINAL LAYOUT FOR 1734-IB8

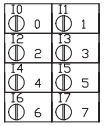


1734-TB

NVENIA
A DURAVANT COMPANY

| | | | |
|---|---|---|---|
| REV: A | ELECTRICAL SCHEMATIC | SIZE: B | |
| DESIGNER: JIT | | DATE: 05/26/2021 | |
| MODEL: TS-2300 | | SHEET: 6 OF | |
| BLUE MARBLE | | DRAWING NUMBER: 210011-DD06 | |

DIVIDER ENCLOSURE

## POINT I/O RACK #1 - INPUT MODULE #3

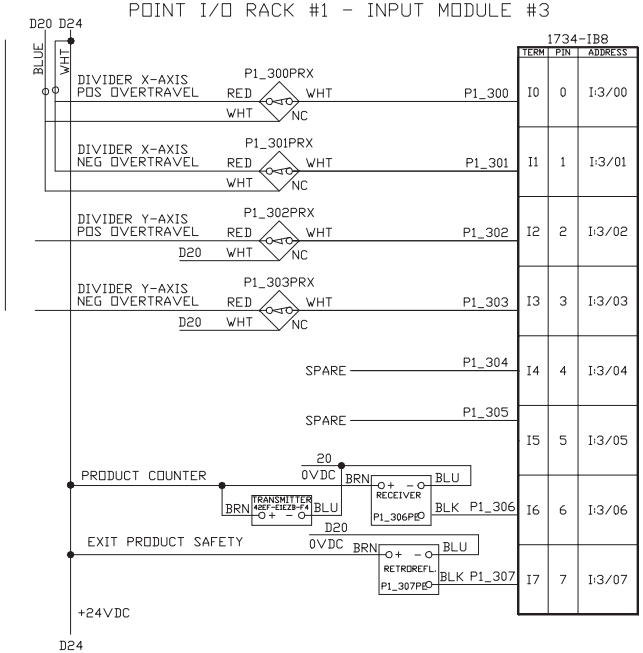


## POINT I/O RACK #1 - OUTPUT MODULE #4

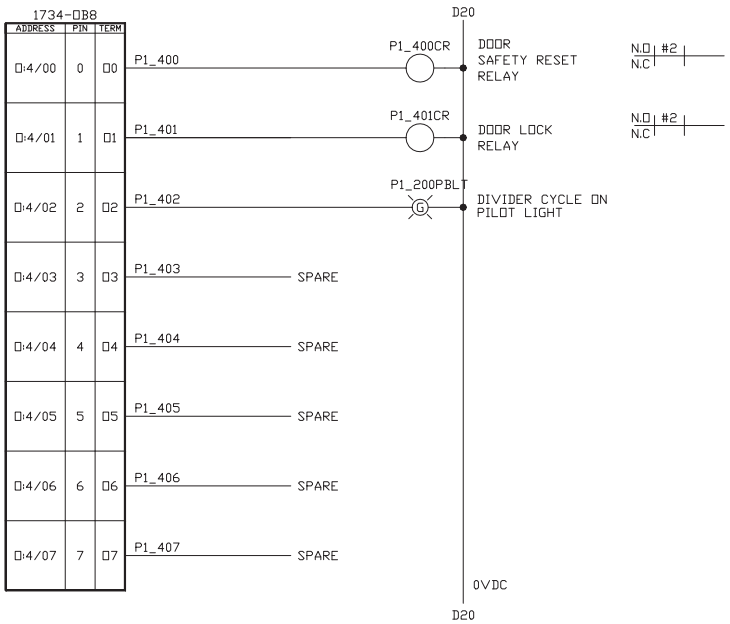


TERMINAL LAYOUT FOR 1734-OB8E

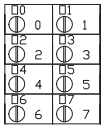


1734-TB

TERMINAL LAYOUT FOR 1734-IB8

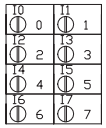


1734-TB

NVENIA
A DURAVANT COMPANY

| | | | |
|---|---|---|---|
| REV. A | ELECTRICAL SCHEMATIC | SIZE: B | |
| DESIGNER: JIT | | DATE: 10/26/2021 | |
| MODEL: TS-2300 | | SHEET: 7 OF | |
| BLUE MARBLE | | DRAWING NUMBER: 210011-DD07 | |

DIVIDER ENCLOSURE

## MULTI-PIN PLUG DISTRIBUTOR
FESTO NEDU-L4R1-M8G3-M12G8

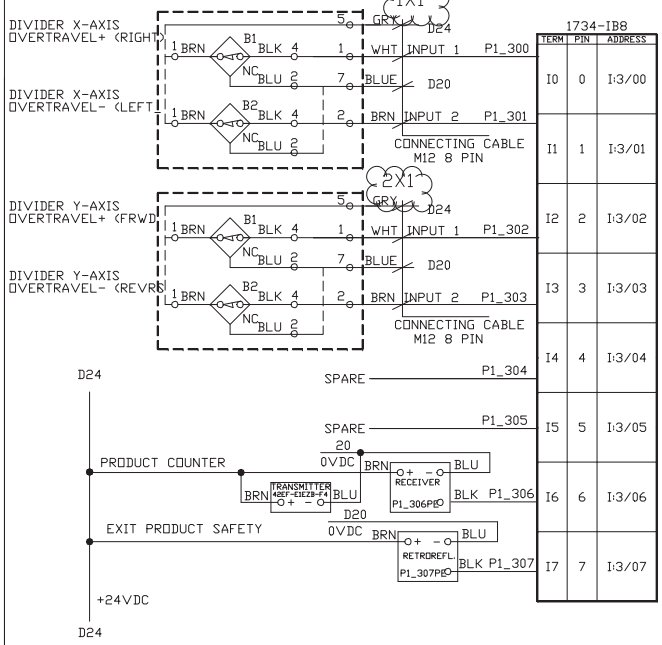


## POINT I/O RACK #1 - OUTPUT MODULE #4

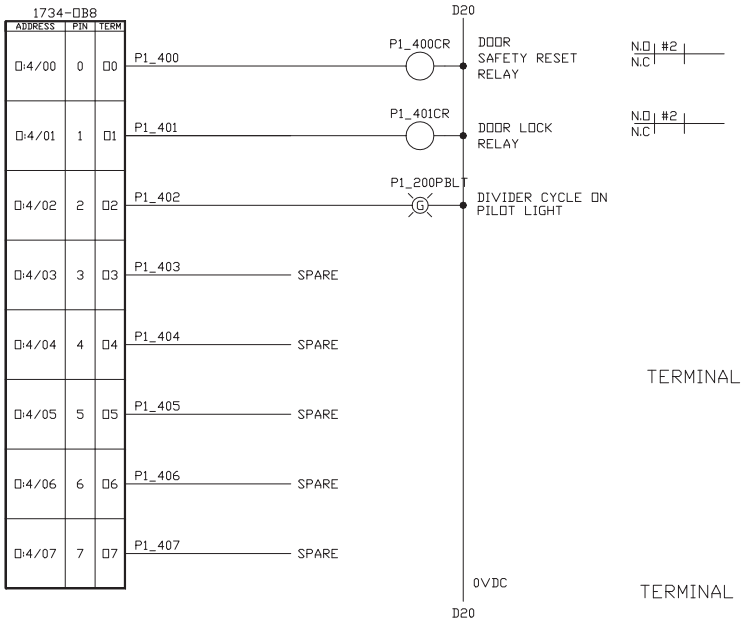


## TERMINAL LAYOUT FOR 1734-OB8E

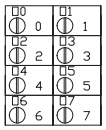


1734-TB

## TERMINAL LAYOUT FOR 1734-IB8

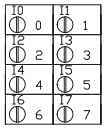


1734-TB

## PROXIMITY SWITCH

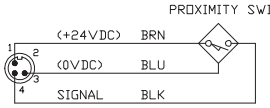


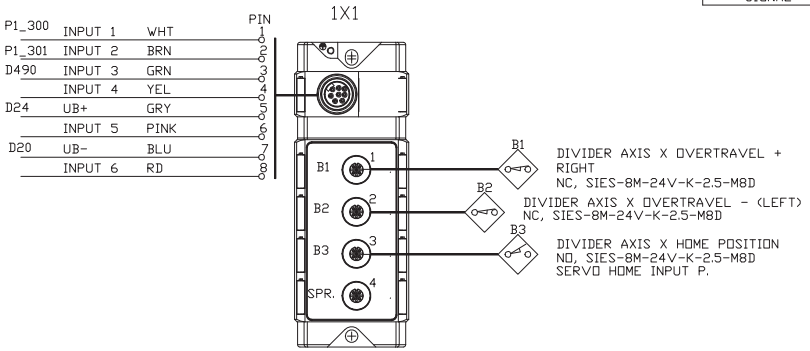


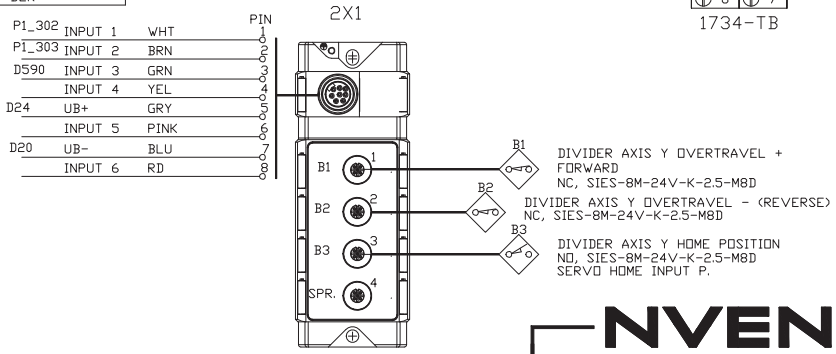


NVENIA
A DURAVANT COMPANY

| | | | |
|---|---|---|---|
| REV. A | ELECTRICAL SCHEMATIC | SIZE: B | |
| DESIGNER: JIT | | DATE: 10/26/2021 | |
| MODEL: TS-2300 | | SHEET: 7 OF | |
| BLUE MARBLE | | DRAWING NUMBER: 210011-DD07 | |

DIVIDER ENCLOSURE

## POINT I/O RACK #1 - INPUT MODULE #5

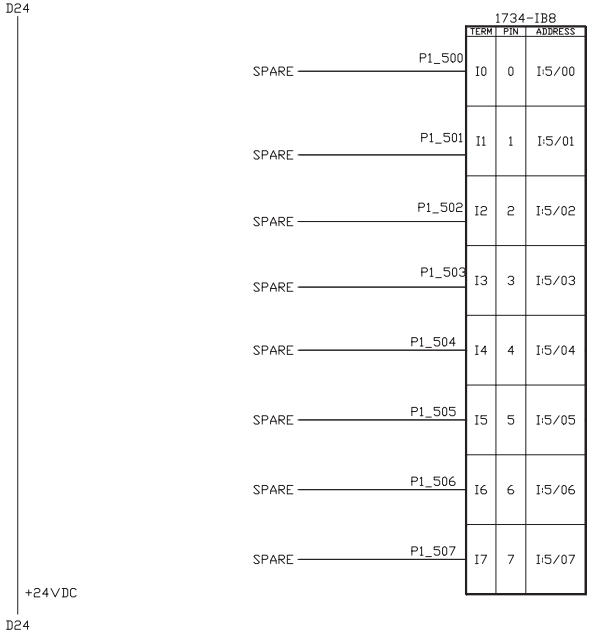


TERMINAL LAYOUT FOR 1734-IB8

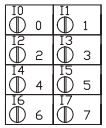


1734-TB

NVENIA
A DURAVANT COMPANY

| | | | |
|---|---|---|---|
| REV. A | ELECTRICAL SCHEMATIC | SIZE: B | |
| DESIGNER: JIT | | DATE: 05/26/2021 | |
| MODEL: TS-2300 | | SHEET: 8 OF | |
| BLUE MARBLE | | DRAWING NUMBER: 210011-DD08 | |

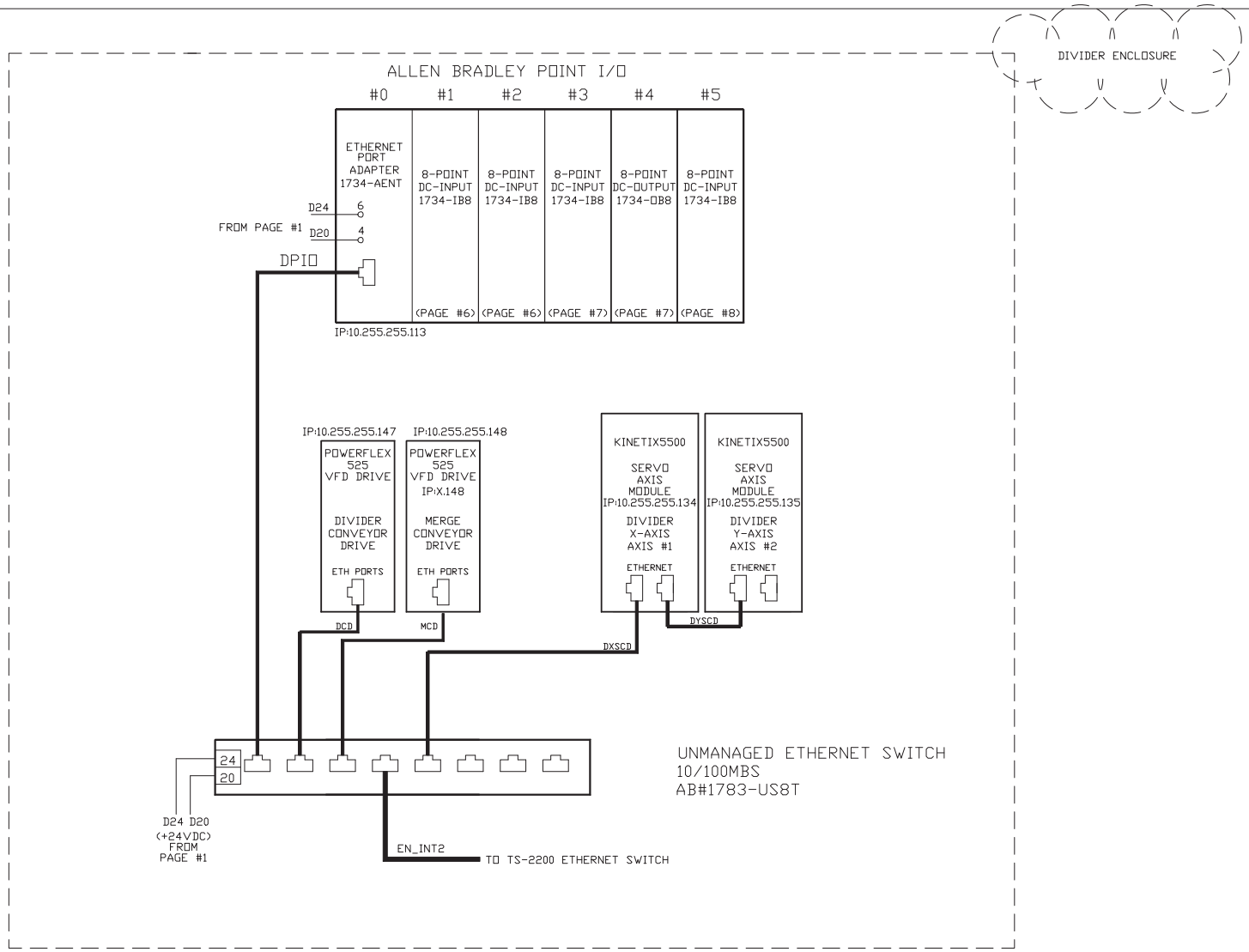


NVENIA
A DURAVANT COMPANY

| | | | |
|---|---|---|---|
| REV. A | ELECTRICAL SCHEMATIC | SIZE: B | |
| DESIGNER: JIT | | DATE: 05/26/2021 | |
| MODEL: TS-2300 | | SHEET: 9 OF | |
| BLUE MARBLE | | DRAWING NUMBER: 210011-DD09 | |